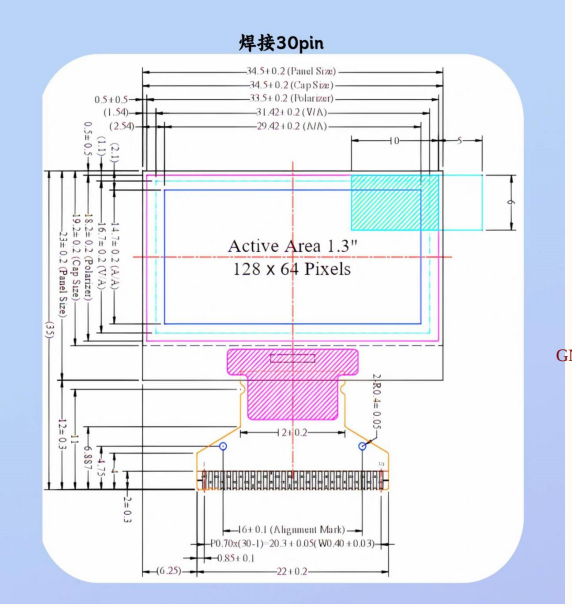

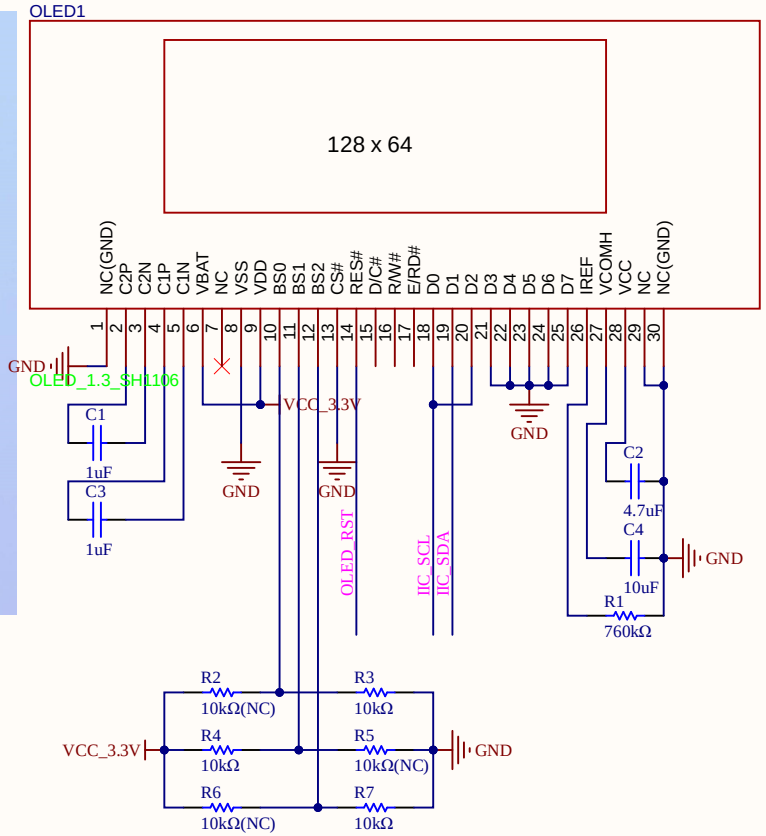

引脚说明

焊接/插接30pin

Pin	Symbol
1	N.C. (GND)
2	C2P
3	C2N
4	C1P
5	C1N
6	VBAT
7	VSS
8	VSS
9	VDD
10	NC
11	BS1
12	BS2
13	CS#
14	RES#
15	D/C#
16	R/W#
17	E/RD#
18	D0
19	D1
20	D2
21	D3
22	D4
23	D5
24	D6
25	D7
26	IREF
27	VCOMH
28	VCC
29	NC
30	N.C. (GND)

Title		
Size A4	Number	Revision
Date: 2/21/2026		Sheet of
File: F:\OneDriveSync\..\LCD-TFT.SchDoc		Drawn By:

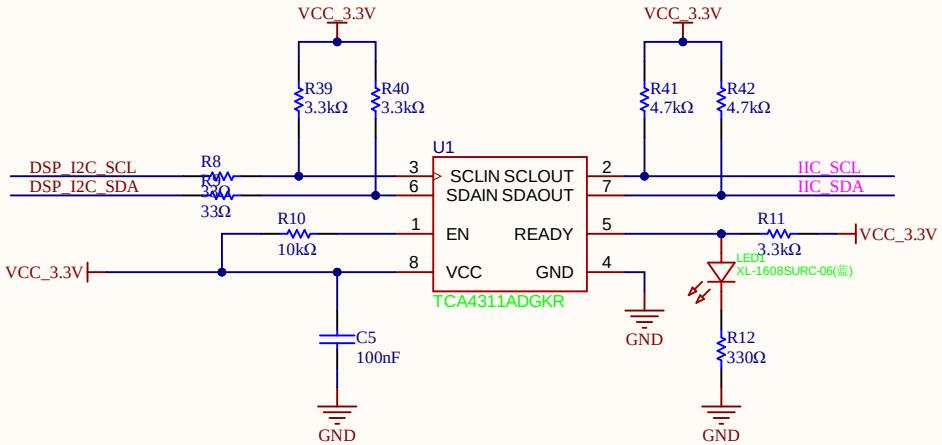

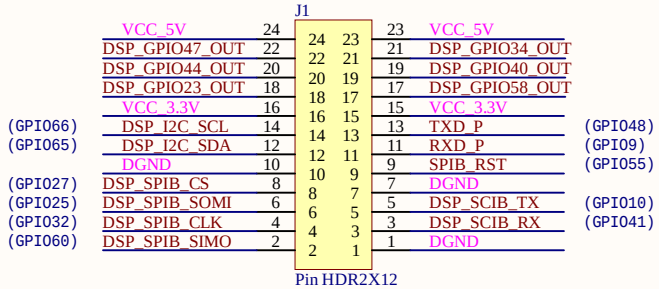

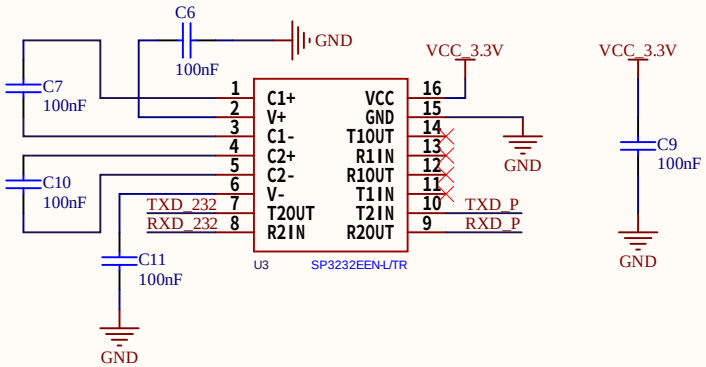

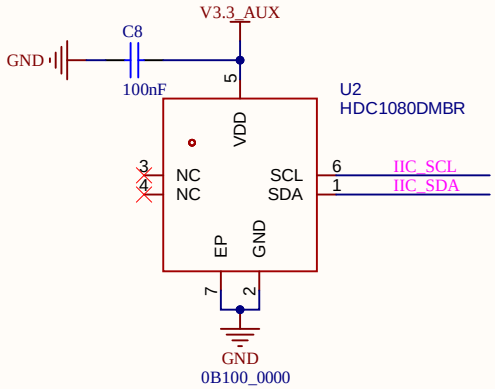

Title			
Size A4	Number		Revision
Date: 2/21/2026		Sheet of	
File: F:\OneDriveSync\..\IIC_Interface.SchDoc		Drawn By:	

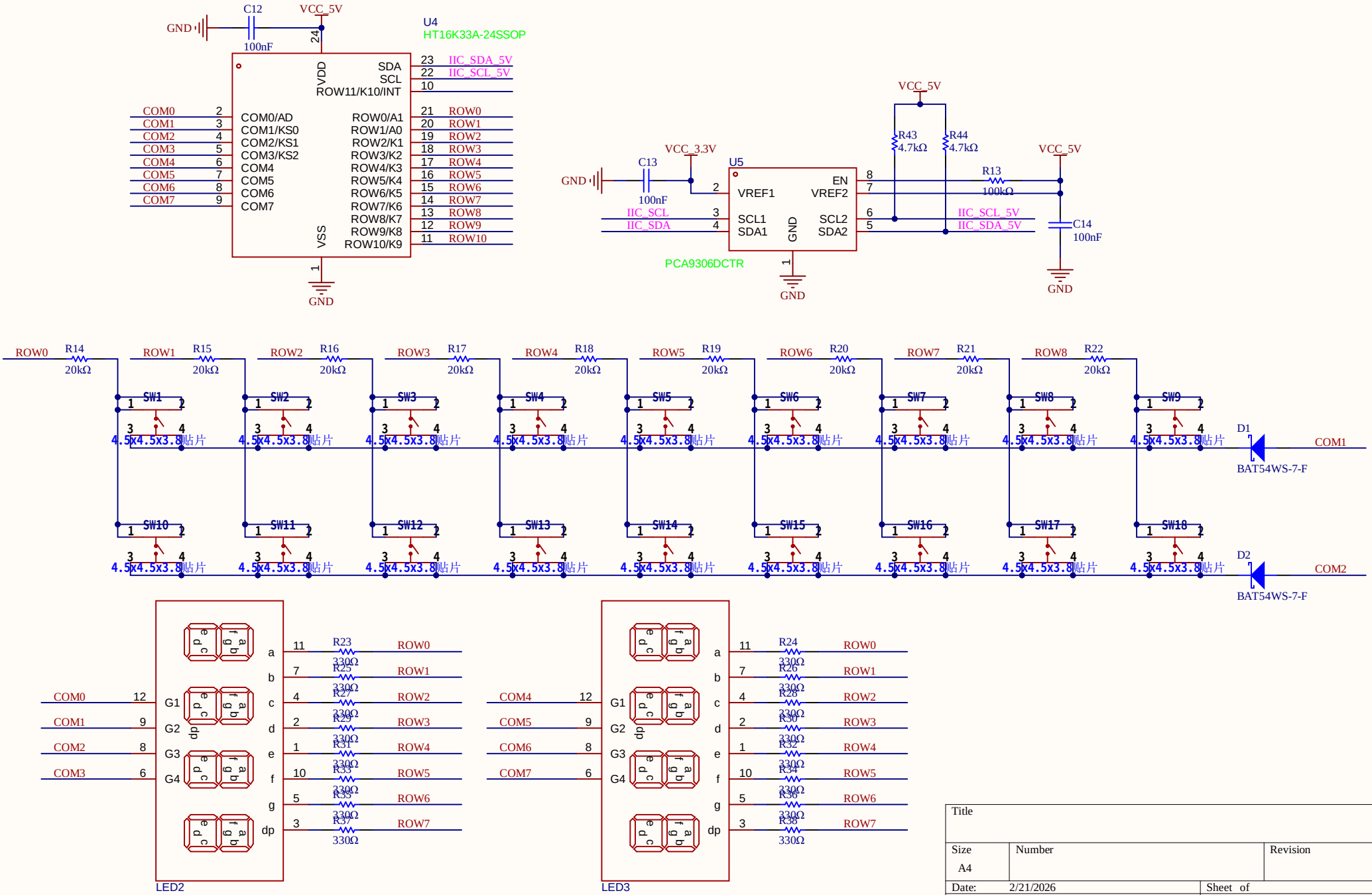
U4
HT16K33A-24SSOP
C12
100nF
VCC_5V
GND
VDD
VSS
SDA
SCL
ROW11/K10/INT
COM0/AD
COM1/KS0
COM2/KS1
COM3/KS2
COM4
COM5
COM6
COM7
ROW0/A1
ROW1/A0
ROW2/K1
ROW3/K2
ROW4/K3
ROW5/K4
ROW6/K5
ROW7/K6
ROW8/K7
ROW9/K8
ROW10/K9
IIC_SDA_5V
IIC_SCL_5V
U5
PCA9306DCTR
C13
VCC_3.3V
VREF1
VREF2
EN
SCL1
SDA1
SCL2
SDA2
IIC_SCL
IIC_SDA
R43
4.7kΩ
R44
4.7kΩ
R13
100kΩ
C14
100nF
R14
20kΩ
R15
20kΩ
R16
20kΩ
R17
20kΩ
R18
20kΩ
R19
20kΩ
R20
20kΩ
R21
20kΩ
R22
20kΩ
SW1
SW2
SW3
SW4
SW5
SW6
SW7
SW8
SW9
SW10
SW11
SW12
SW13
SW14
SW15
SW16
SW17
SW18
4.5x4.5x3.8贴片
D1
D2
BAT54WS-7-F
COM1
COM2
LED2
LED3
R23
R24
R25
R26
R27
R28
R29
R30
R31
R32
R33
R34
R35
R36
R37
R38
330Ω
ROW0
ROW1
ROW2
ROW3
ROW4
ROW5
ROW6
ROW7
ROW8
ROW9
ROW10
Title
Size
A4
Number
Revision
Date: 2/21/2026
Sheet of
File: F:\OneDriveSync\..\LED_7Seg.SchDoc
Drawn By:

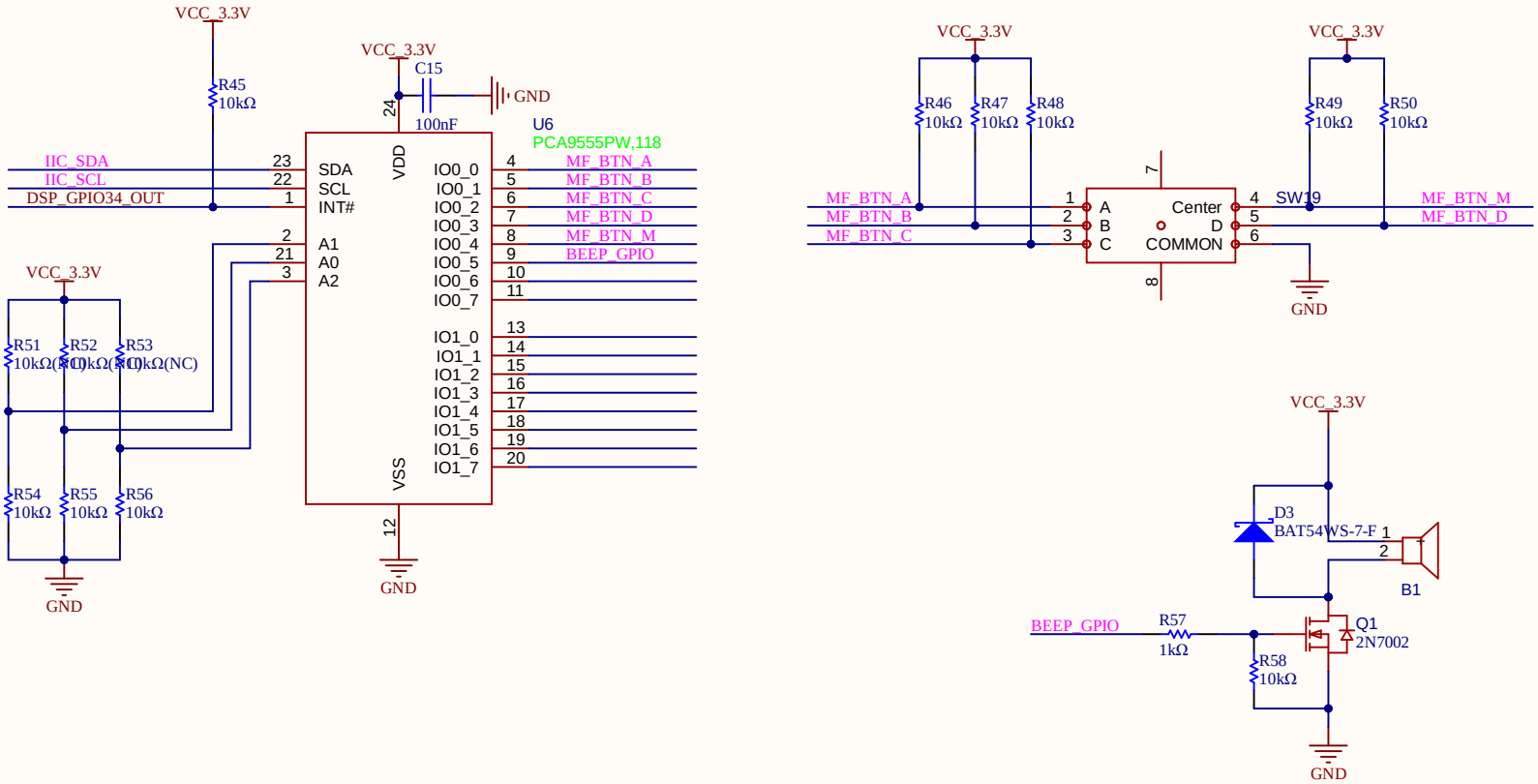

Title		
Size A4	Number	Revision
Date: 2/21/2026		Sheet of
File: F:\OneDriveSync\..\GPIO_Ext.SchDoc		Drawn By: