# NUCLEO-[No Variations]

## MB2046

## Table of contents


Sheet 1: Project overview (this page)

Sheet 2: MB2046_Top

Sheet 3: STM32_microcontroller_IOs

Sheet 4: Connectors

Sheet 5: USB-C_Device

Sheet 6: FDCAN

Sheet 7: Power

Sheet 8: STLINK_V2EC


HW1

STICKER PRODUCT

N/A

HW2

N/A

STICKER BOARD

HW5

PCB

MB2046

U_TOP

TOP.SchDoc

## Legend

General comment such as function title, configuration, ...

Text to be added to silkscreen.

Warning text.

Notes to generate the board layout.

## OPEN PLATFORM LICENSE AGREEMENT


The Open Platform License Agreement (“Agreement”) is a binding legal contract between you ("You") and STMicroelectronics International N.V. (“ST”), a company incorporated under the laws of the Netherlands acting for the purpose of this Agreement through its Swiss branch 39, Chemin du Champ des Filles, 1228 Plan-les-Ouates, Geneva, Switzerland.

By using the enclosed reference designs, schematics, PC board layouts, and documentation, in hardcopy or CAD tool file format (collectively, the “Reference Material”), You are agreeing to be bound by the terms and conditions of this Agreement. Do not use the Reference Material until You have read and agreed to this Agreement terms and conditions. The use of the Reference Material automatically implies the acceptance of the Agreement terms and conditions.

The complete Open Platform License Agreement can be found on www.st.com/opla.

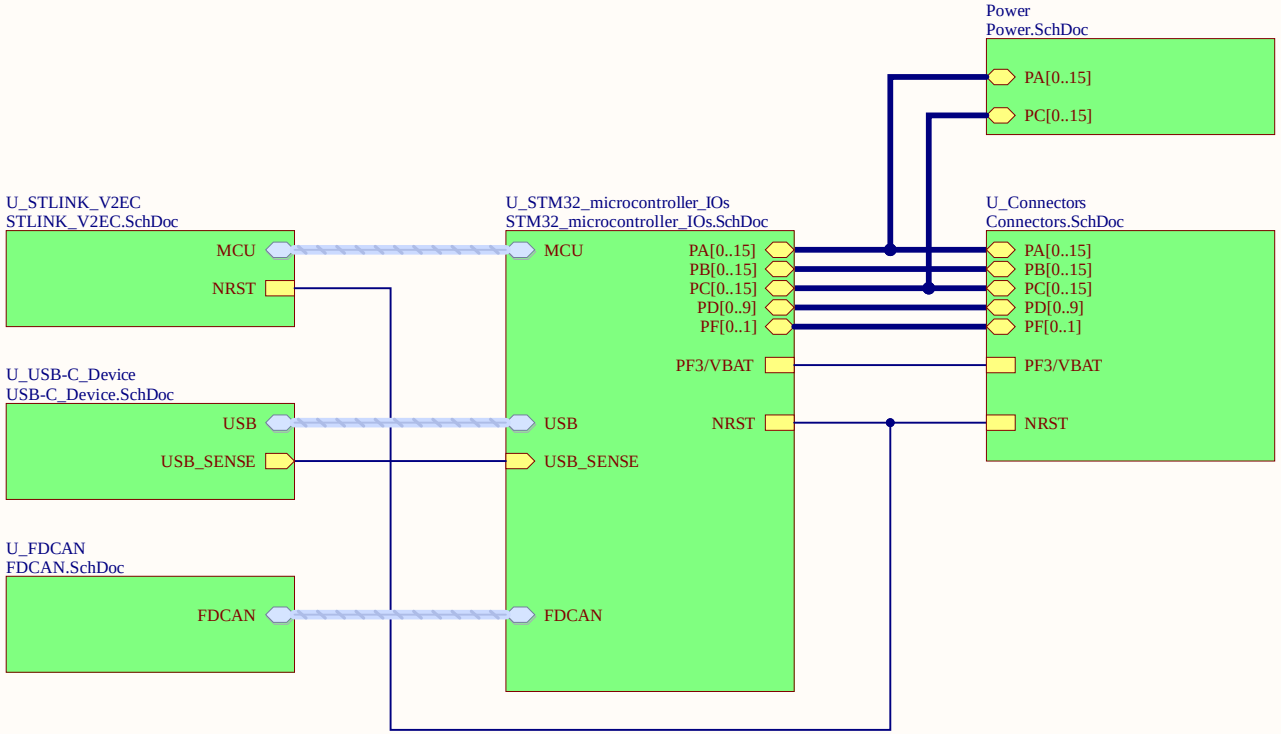


FID HW9 FID HW10
FID HW16 FID HW17

| | | |
|---|---|---|
| Title: **TOP** | | |
| Project: **NUCLEO** | | |
| Variant: [No Variations] | | |
| Revision: B-03 | | Reference: MB2046 |
| Size: A4 | Date: 24-SEP-2024 | Sheet: 2 of 8 |

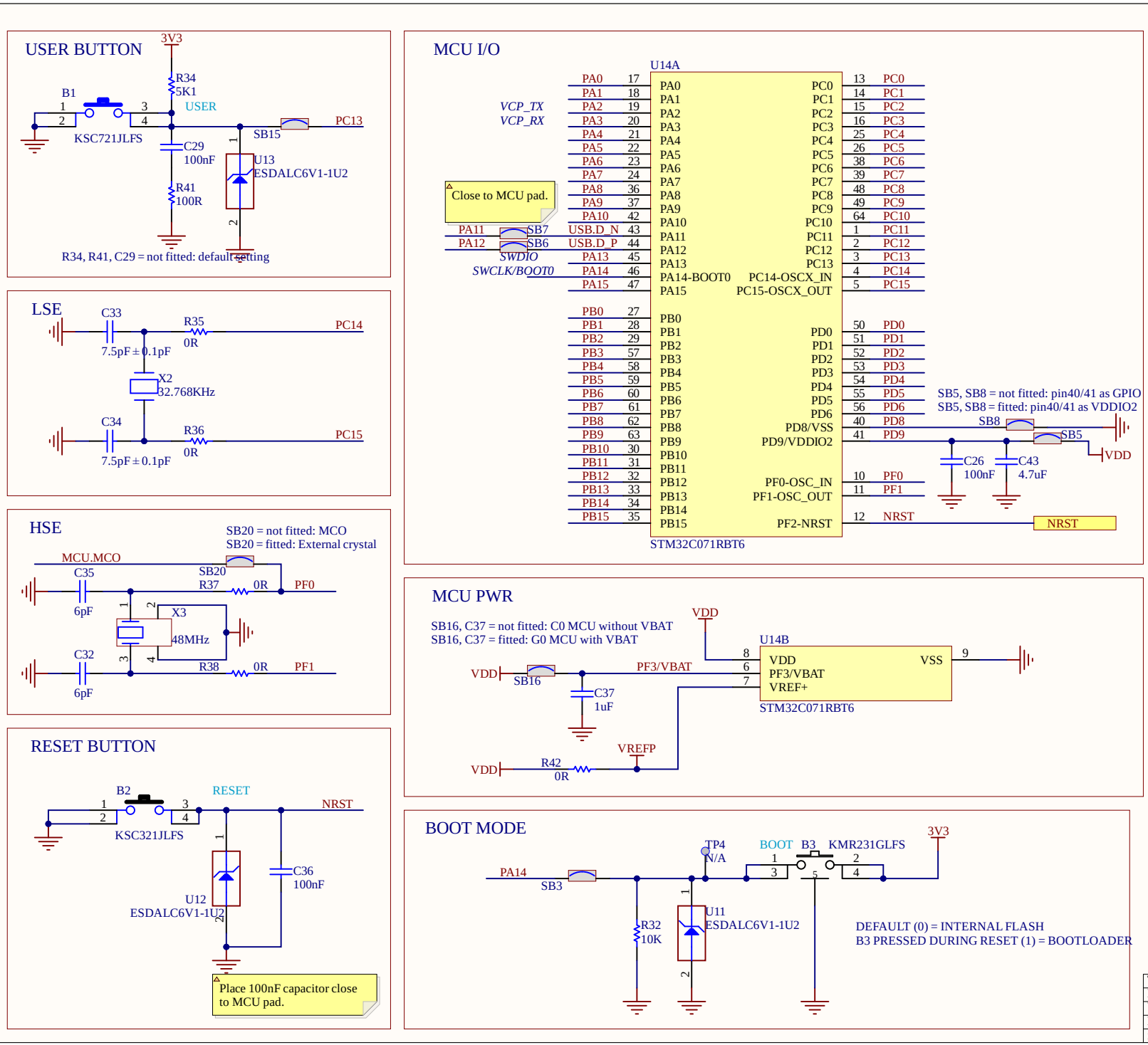


| | | |
|---|---|---|
| Title: **STM32_microcontroller_IOs** | | |
| Project: **NUCLEO** | | |
| Variant: [No Variations] | | |
| Revision: B-03 | | Reference: MB2046 |
| Size: A4 | Date: 24-SEP-2024 | Sheet: 3 of 8 |

## CONNECTORS

PA[0..15] — PA[0..15]
PB[0..15] — PB[0..15]
PC[0..15] — PC[0..15]
PD[0..9] — PD[0..9]
PF[0..1] — PF[0..1]
PF3/VBAT — PF3/VBAT
NRST — NRST

## COLOR LEGEND

MORPHO SPECIFICATION
ARDUINO SPECIFICATION
STM32 ALTERNATE FUNCTION
STM32 IO PORT
~~FUNCTION NOT AVAILABLE~~

## ST MORPHO CONNECTOR LEFT SIDE

## ARDUINO V3

Operating range: 3V < VCC < 3.6V

## ST MORPHO CONNECTOR RIGHT SIDE

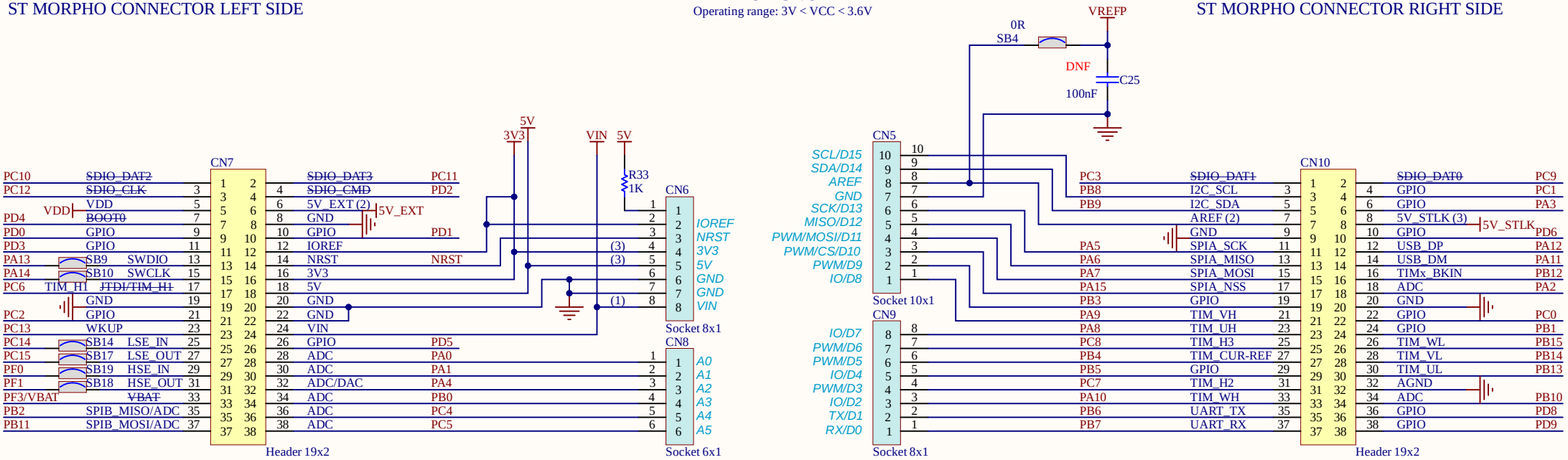


(1): VIN (NUCLEO INPUT) WARNING voltage applied to 7V < VIN < 12V
(2): 5V_EXT, AREF (NUCLEO INPUT)
(3): 5V, 3V3, IOREF, 5V_STLK (NUCLEO OUTPUT, SHIELD INPUT)

| | | |
|---|---|---|
| Title: **Connectors** | | |
| Project: **NUCLEO** | | |
| Variant: [No Variations] | | |
| Revision: B-03 | | Reference: MB2046 |
| Size: A4 | Date: 24-SEP-2024 | Sheet: 4 of 8 |

## USER USB

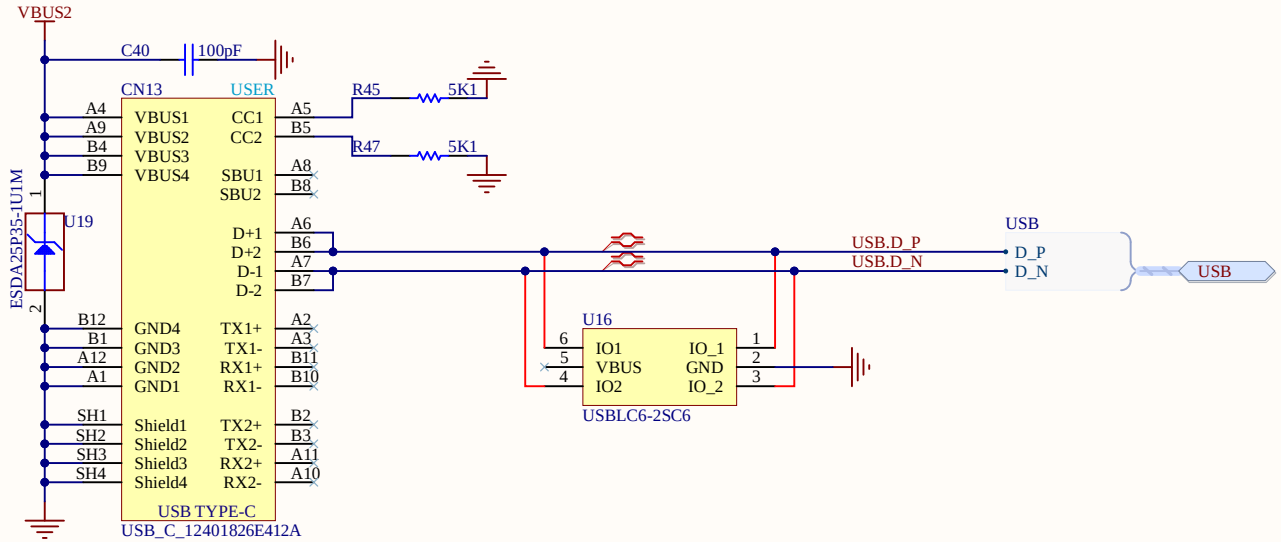


## VBUS OVP

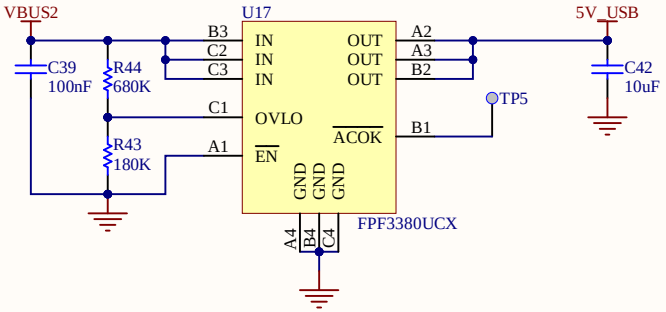


Vo=(680+180)/180*1.2=5.73V

## VBUS SENSE

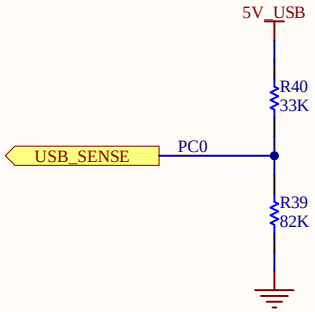


| | | |
|---|---|---|
| Title: **USB-C_Device** | | |
| Project: **NUCLEO** | | |
| Variant: [No Variations] | | |
| Revision: B-03 | | Reference: MB2046 |
| Size: A4 | Date: 24-SEP-2024 | Sheet: 5 of 8 |

## CAN FD

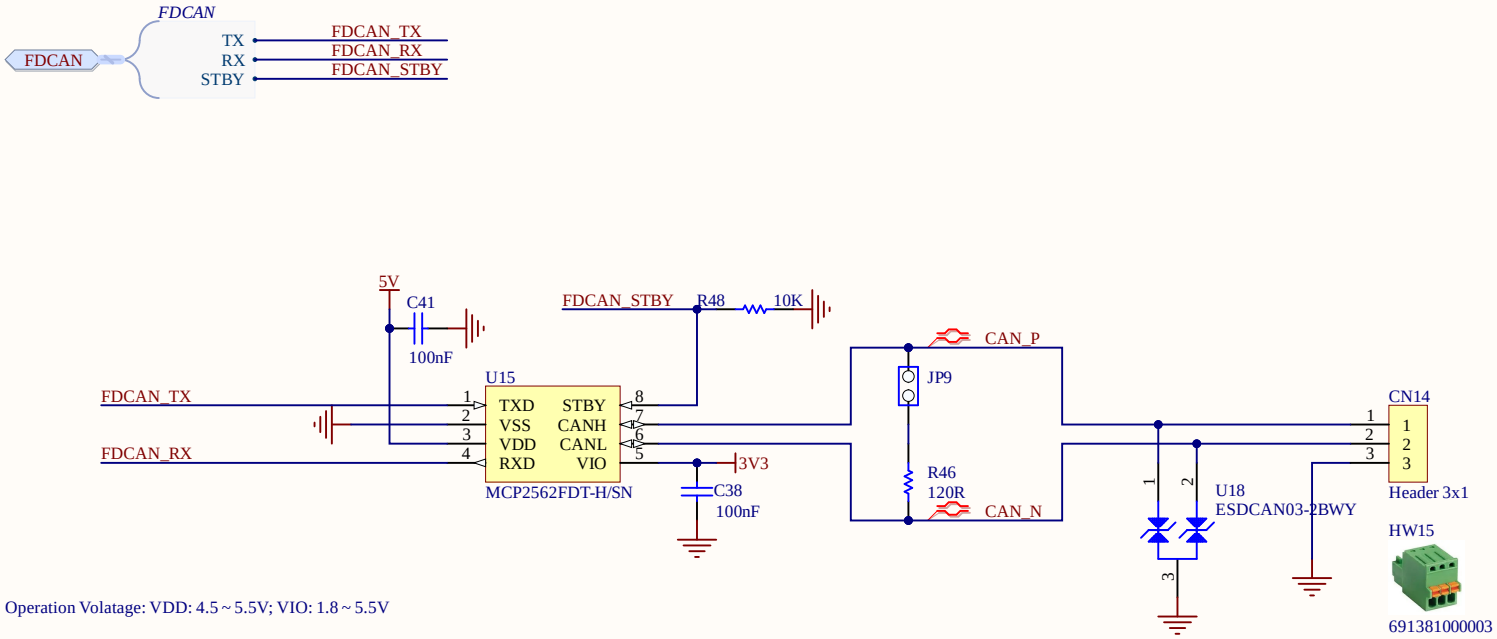


Operation Volatage: VDD: 4.5 ~ 5.5V; VIO: 1.8 ~ 5.5V

| | | |
|---|---|---|
| Title: **FDCAN** | | |
| Project: **NUCLEO** | | |
| Variant: [No Variations] | | |
| Revision: B-03 | | Reference: MB2046 |
| Size: A4 | Date: 24-SEP-2024 | Sheet: 6 of 8 |

## POWER SOURCES

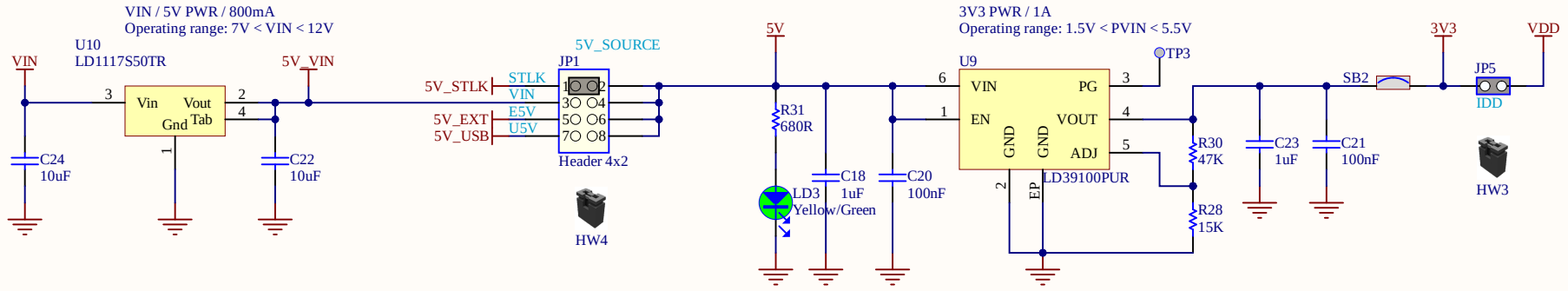


## USER LED

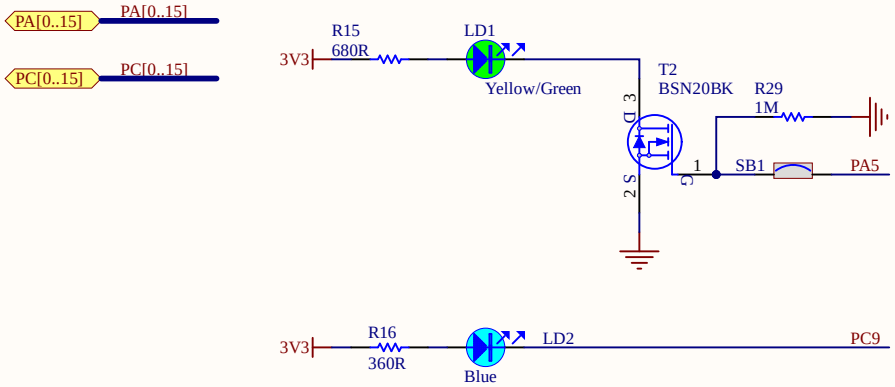


## GND HEADERS

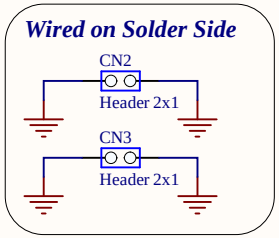


| | | |
|---|---|---|
| Title: **Power** | | |
| Project: **NUCLEO** | | |
| Variant: [No Variations] | | |
| Revision: B-03 | | Reference: MB2046 |
| Size: A4 | Date: 24-SEP-2024 | Sheet: 7 of 8 |

# STLINK-V2EC

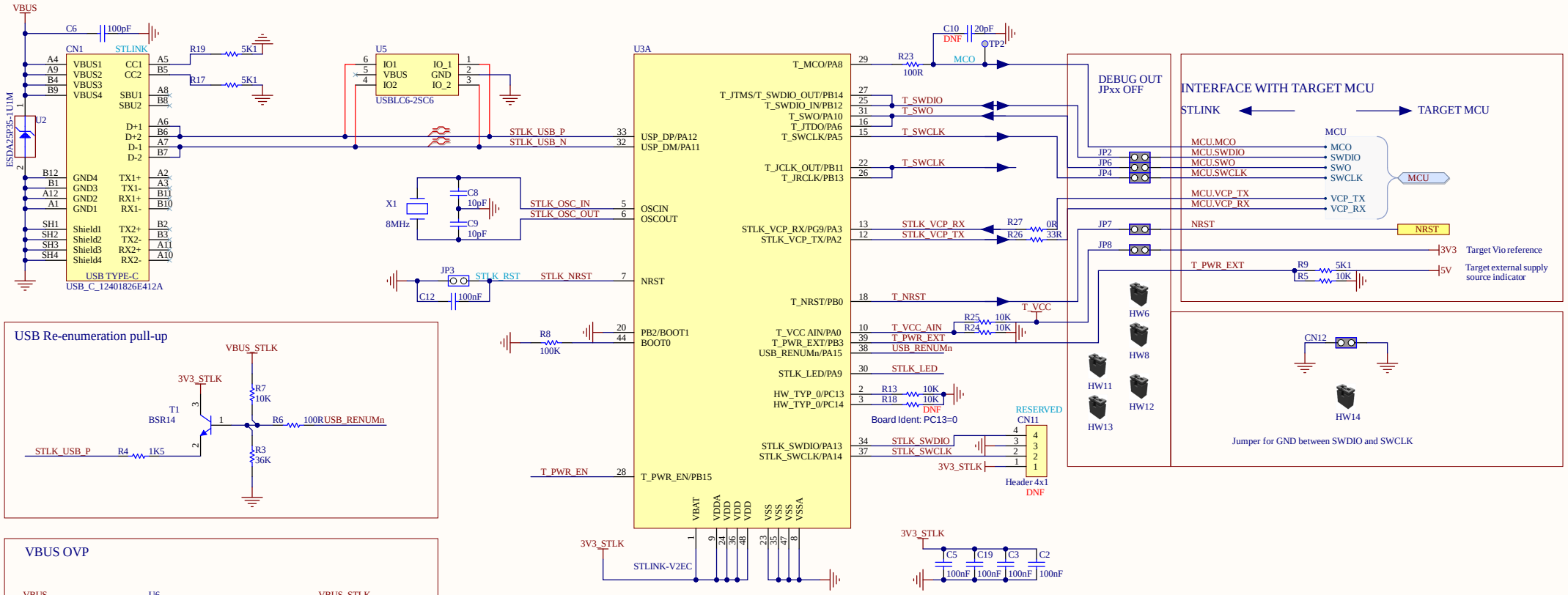


## USB Re-enumeration pull-up




## VBUS OVP

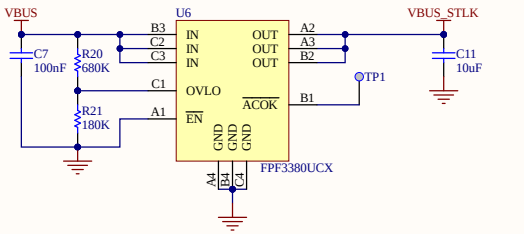


## 5V_STLK power switch (5V/500mA)

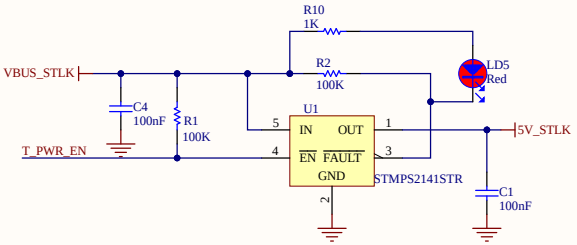


## LED STLINK

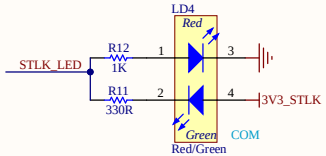


## ST-LINK POWER (3V3/200mA)

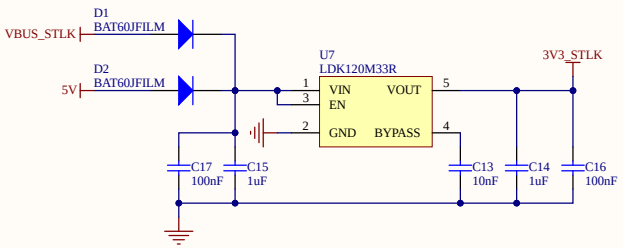


## STDC14 RECEIVER

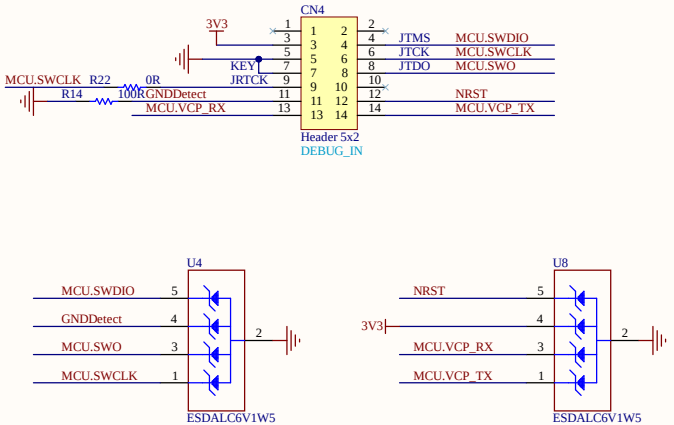


| | | |
|---|---|---|
| Title: **STLINK-V2EC** | | |
| Project: **NUCLEO** | | |
| Variant: [No Variations] | | |
| Revision: B-03 | | Reference: MB2046 |
| Size: A3 | Date: 24-SEP-2024 | Sheet: 8 of 8 |

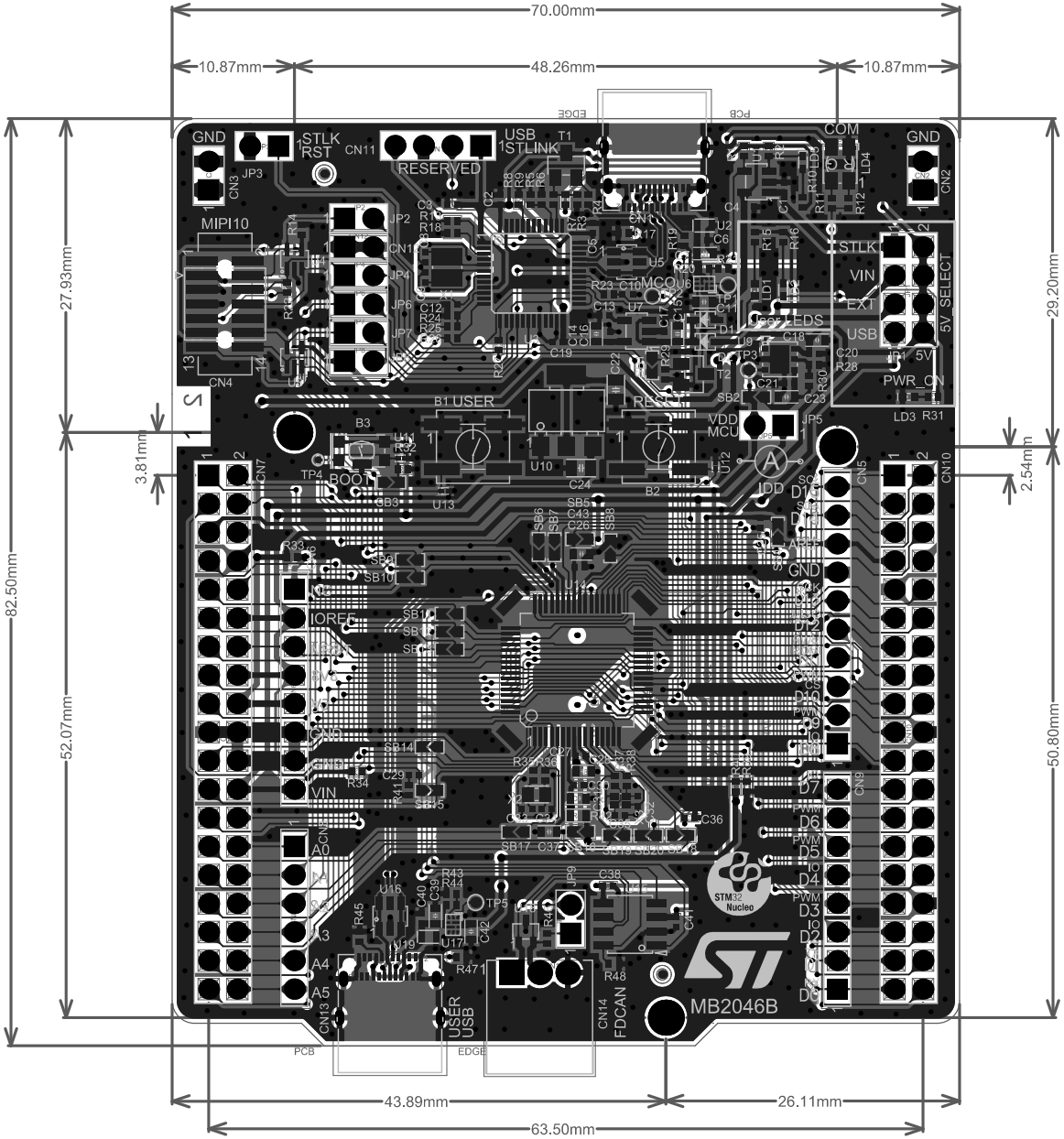


| | | | |
|---|---|---|---|
| Project: NUCLEO | | | |
| Layer: Top Overlay | Scale: 3.000 | Order: GTO | |
| Variant: C07 B | MB2046 | | |
| Date: 24-SEP-2024 | | Rev: B | |

# Board Stack Report