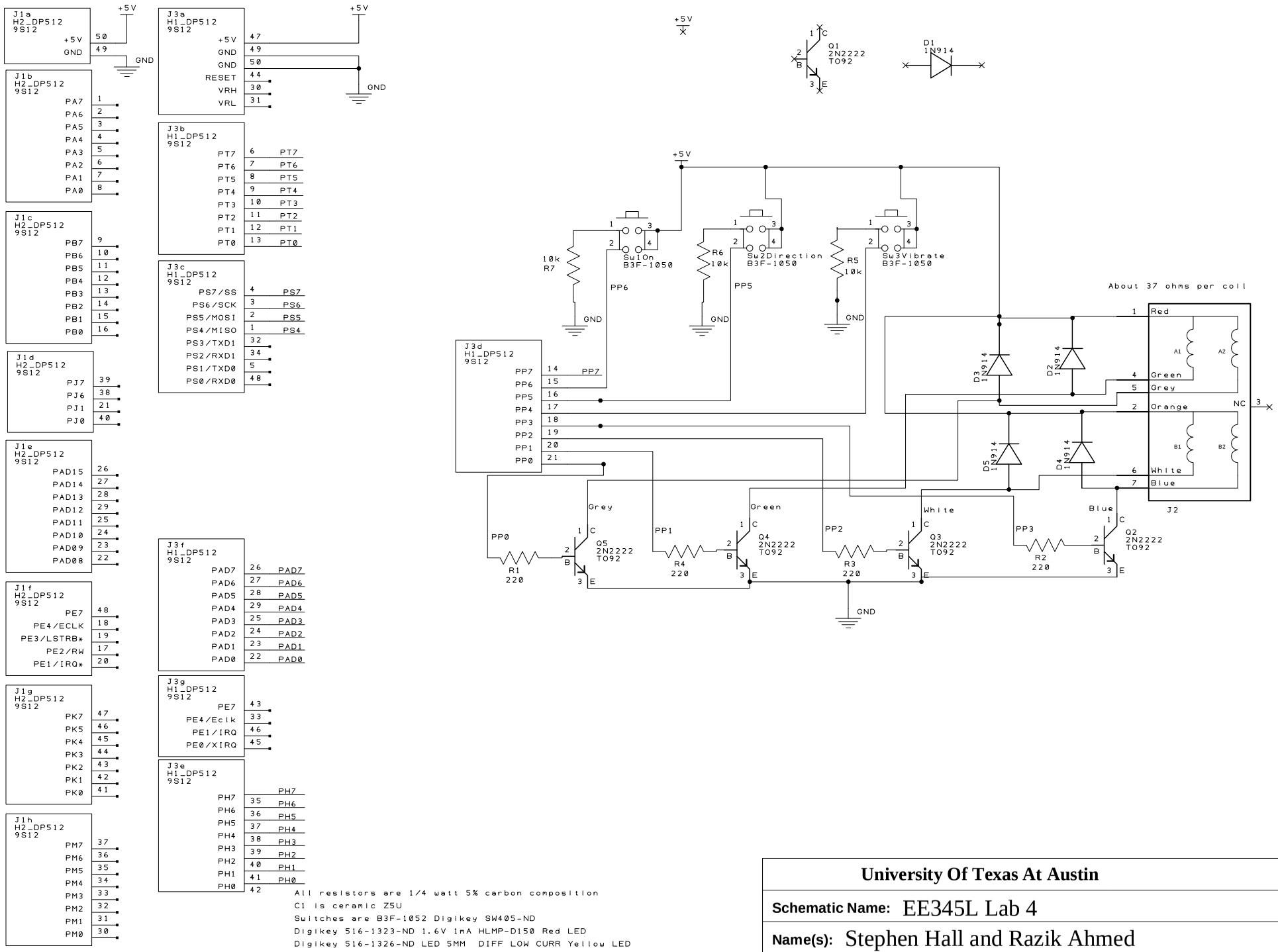

All resistors are 1/4 watt 5% carbon composition
C1 is ceramic Z5U
Switches are B3F-1052 Digikey SW405-ND
Digikey 516-1323-ND 1.6V 1mA HLMP-D150 Red LED
Digikey 516-1326-ND LED 5MM DIFF LOW CURR Yellow LED
Digikey 516-1327-ND LED 5MM DIFF LOW CURR Green LED

A1

University Of Texas At Austin	
Schematic Name: EE345L Lab 4	
Name(s): Stephen Hall and Razik Ahmed	
Date: September 30, 2010	**Semester:** Fall 2010