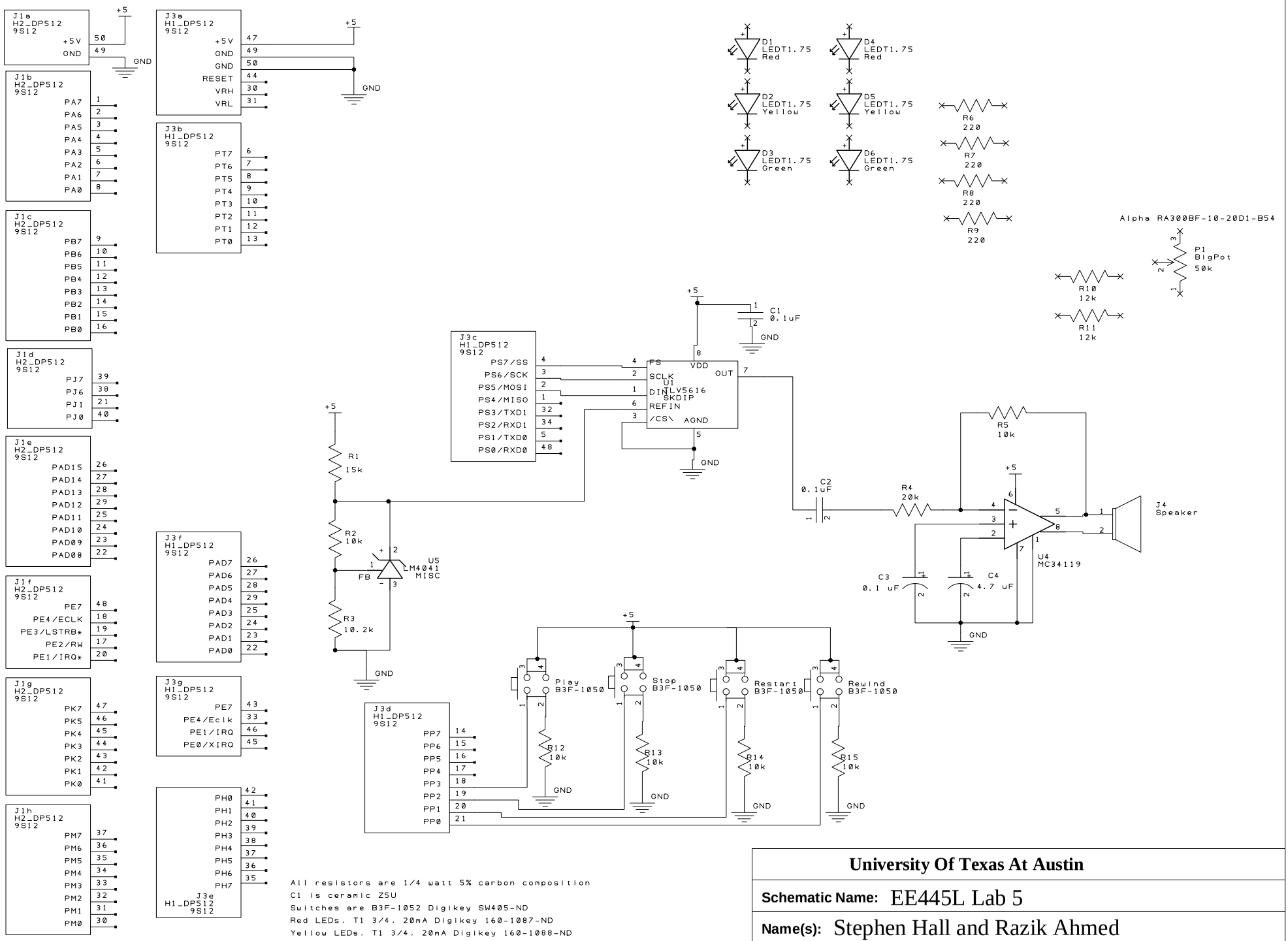

All resistors are 1/4 watt 5% carbon composition
C1 is ceramic Z5U
Switches are B3F-1052 Digikey SW405-ND
Red LEDs, T1 3/4, 20mA Digikey 160-1087-ND
Yellow LEDs, T1 3/4, 20mA Digikey 160-1088-ND
Green LEDs, T1 3/4, 20mA Digikey 160-1089-ND
Slide pot, Alpha RA300BF-10-20D1-B54 Mouser# 312-9100F-50K

University Of Texas At Austin			
Schematic Name:	EE445L Lab 5		
Name(s):	Stephen Hall and Razik Ahmed		
Date:	Sept. 29, 2010	**Semester:**	Fall 2010

A1