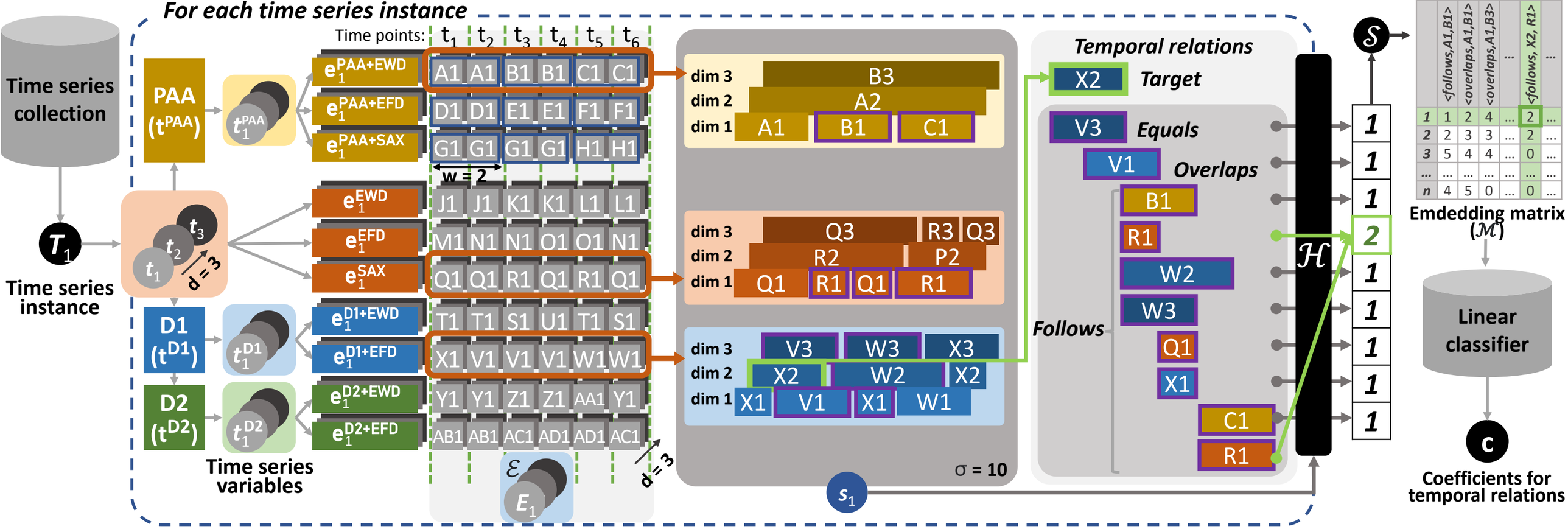

	<follows,A1,B1>	<overlaps,A1,B1>	<overlaps,A1,B3>	...	<follows, X2, R1>	...
1	1	2	4	...	2	...
2	2	3	3	...	2	...
3	5	4	4	...	0	...
...	...	...	...	...	...	...
n	4	5	0	...	0	...