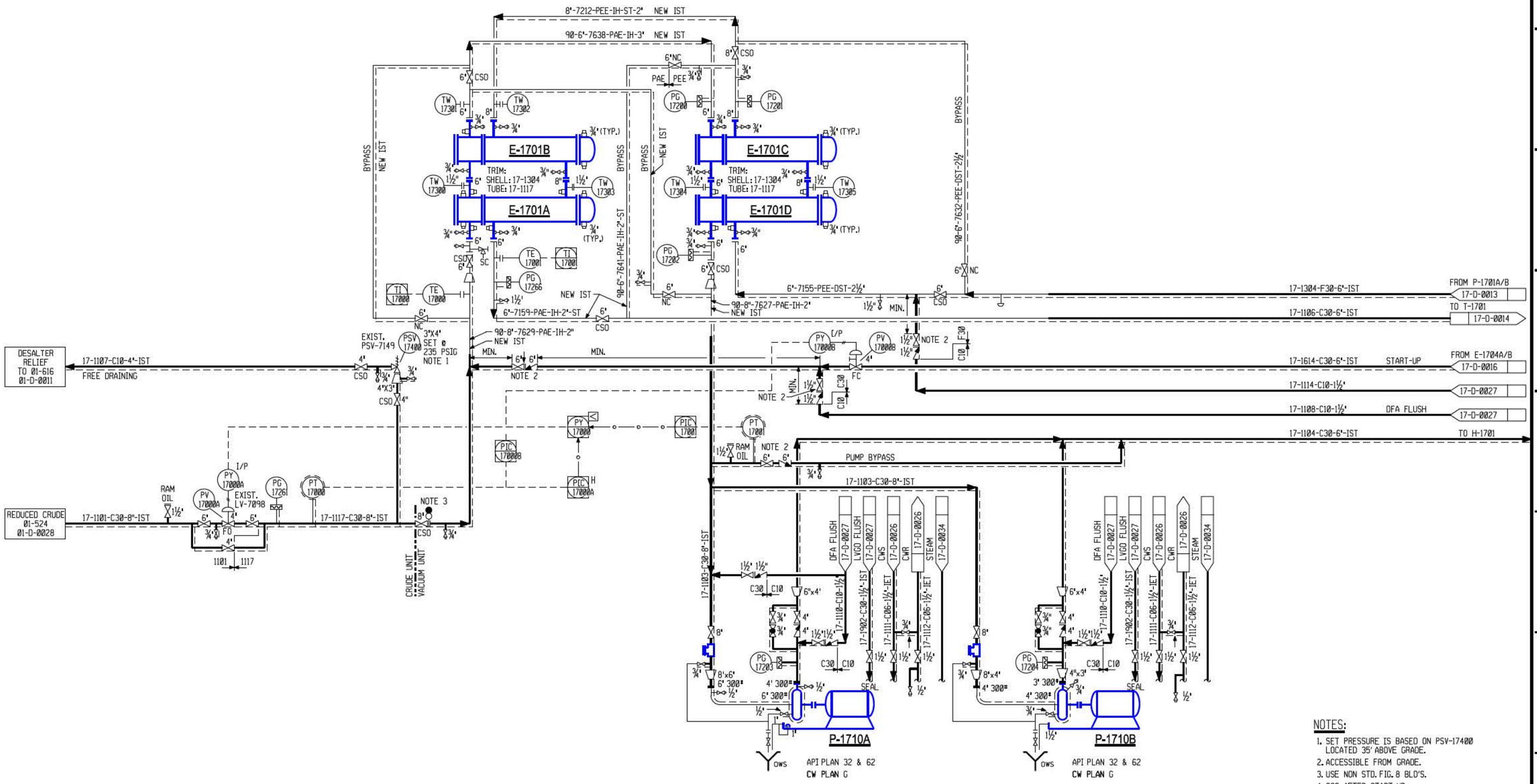

DWG. NO.	REFERENCE DRAWINGS	MK	ZONE	DATE	REVISIONS	DR. / CH.	ENGRG. APVL.	PROJ. APVL.
		8		5-1-12	REV. PER MOC#10571181, T/A 2012	RJB / PP	EG	BJ
		7		4-18-12	REV. PER NOTI 10601288, T/A 2012	RJB / PP	EG	BJ
		6		←17-08	REV. PER MOC#10326704. OEL PIPING	RJB / RR	RR	KAD
		5		11-16-04	CHANGED (4) 6" BYPASS VLVS FM "CSC" TO "NC"	RJB / RR	GW	DG
		4		4-26-04	REV. PER MOC#10023785. ADDED SAMPLE PT.	RJB / PJA	PJA	NPA

MK	ZONE	DATE	REVISIONS	DR. / CH.	ENGRG. APVL.	PROJ. APVL.
3		12-1-94	ADDED STEAM QUENCH TO P-1710A/B PER MOC#407175	RJB / PP	NPA	KD
2		09-07-94	GENERAL REVISION	RJB / PP		
1		06-06-94	FOR HAZOP REVIEW			BG
0		04-08-94	APPROVED FOR CONSTRUCTION	PP / TE	CHT	BG
B		03-18-94	FOR CLIENT REVIEW	RJB / PP		
A			FOR INFORMATION	RJB / EDA		

APPROVED FOR CONSTRUCTION WHEN SIGNED BELOW

[redacted]

DATE

[redacted]

ENGRG. APVL. | DATE | CH. ENGR./SECT. CH. APVL. | DATE

PIPING & INSTRUMENT DIAGRAM
1994 VACUUM UNIT PROJECT
FEED PREHEAT

[redacted]

SCALE	CONT. NO.	DWG. NO.	REV.
NONE	5129.1700	17-D-0011	8