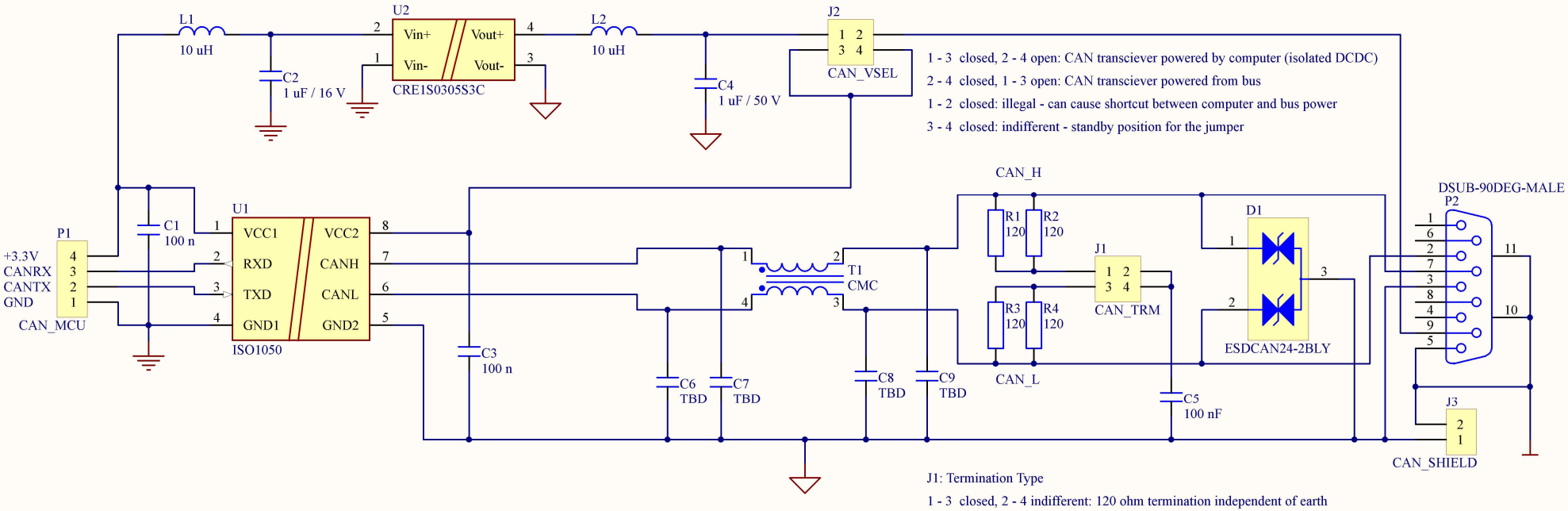

Title	*CANtransc / M8P-rover*		*SZTAKI-SCL* *1111. Budapest* *Kende str. 13-17.* *Alexandros Soumelidis* *CONTWARE Ltd*
Size: A4	Number: 1	Revision: A	
Date: 2018-11-30	Time: 11:52:35 AM	Sheet 1 of 1	
File: E:\Alex\Altium Designer\MyProjects\uBloxM8Prover\CANtrans.SchDoc			