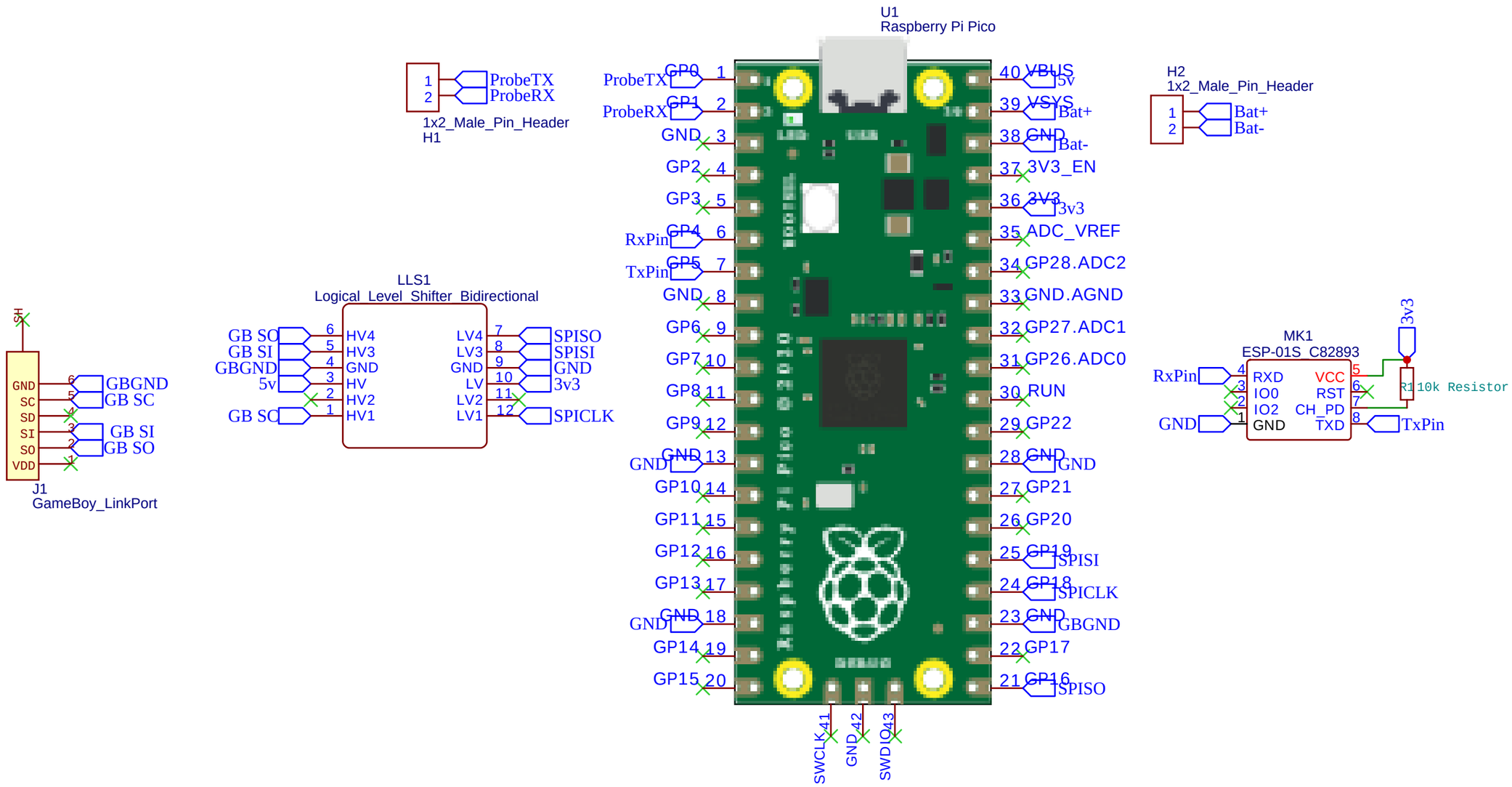

TITLE: PicoAdapter GB		REV: 1.0
嘉立创EDA	Company: Your Company	Sheet: 1/1
	Date: 2022-09-20 Drawn By: zenaro147	