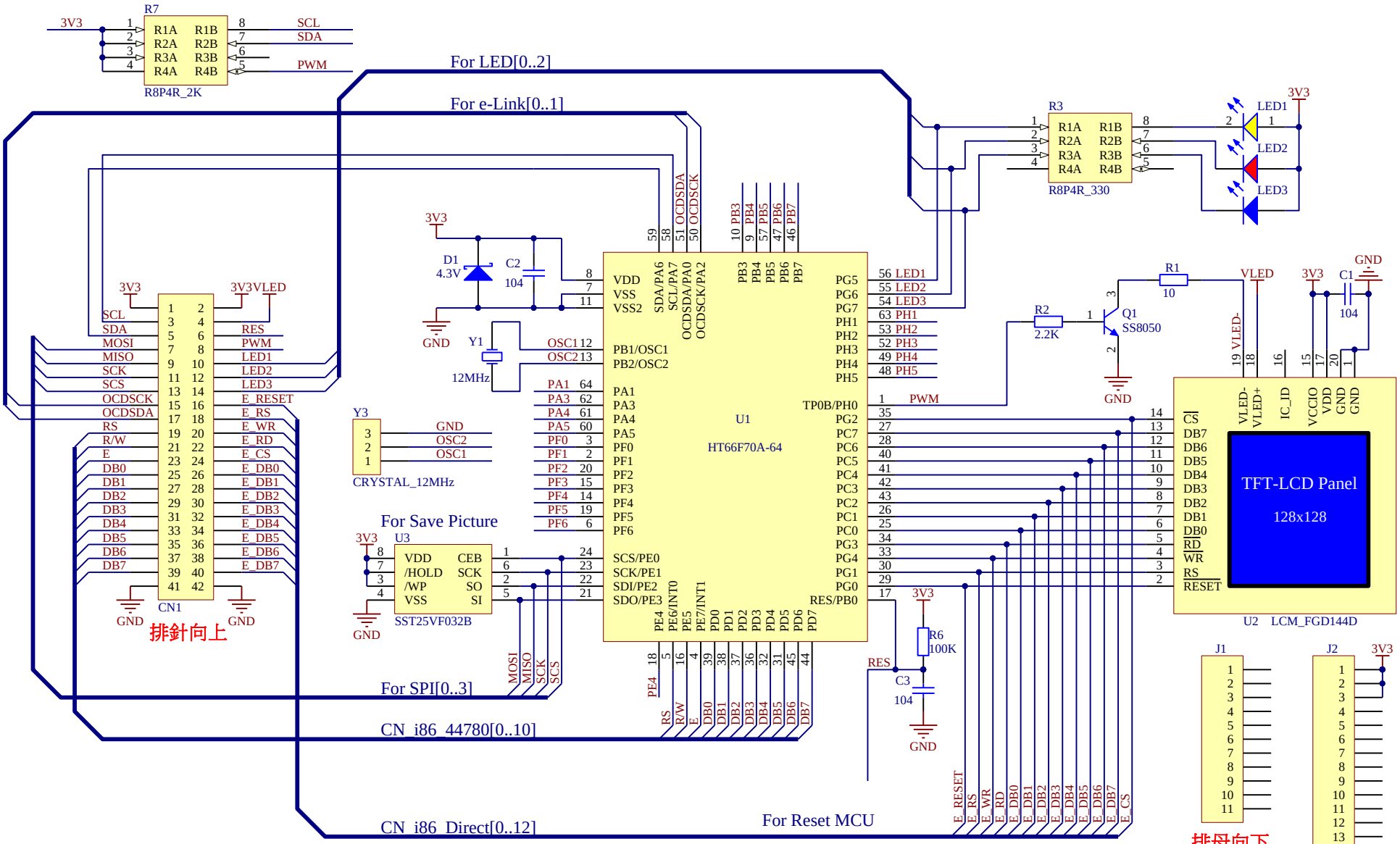

ESK-LCM-200-V1.02

2015-03-26