BM2000 Control Systems Project Report

Aaryan Chaudhari BM24BTECH11002, Dvimidh Sule BM24BTECH11008

PID Controller Design for Automated Drug Infusion

1. System Model

The drug infusion system was modeled as two cascaded first-order dynamics:

$$\dot{c}(t) = \frac{1}{\tau_1}(u(t) - c(t)), \qquad \dot{y}(t) = \frac{1}{\tau_2}(c(t) - y(t)) \tag{1}$$

Taking Laplace transforms with zero initial conditions gives the plant transfer function:

$$G(s) = \frac{Y(s)}{U(s)} = \frac{1}{(\tau_1 s + 1)(\tau_2 s + 1)} \tag{2}$$

Initially, $\tau_1 = 1$ and $\tau_2 = 2$ gave excellent performance, but these values produced unrealistically fast dynamics. To model a slower and more physiologically meaningful response, we chose:

$$\tau_1 = \tau_2 = 5 \tag{3}$$

This gives:

$$G(s) = \frac{1}{(5s+1)^2} = \frac{1}{25s^2 + 10s + 1} \tag{4}$$

2. PID Design and Search Strategy

A standard PID controller was used:

$$C(s) = K_p + \frac{K_i}{s} + K_d s \tag{5}$$

Instead of only manual tuning, we implemented a full grid search over:

$$K_p, K_i, K_d \in [0, 20], \qquad \text{step size} = 0.5$$

This gave a total of:

$$41^3 = 1{,}030{,}301 \text{ combinations}$$

A custom score function was used to penalize:

- steady-state error,
- overshoot above 5%,
- settling time above 2 minutes.

During tuning, we observed that the steady-state error stabilized first, overshoot improved next, and settling time took the longest to satisfy. Hence, the settling-time penalty was increased and the search ranges were adjusted to prioritize faster acceptable responses.

The first fully acceptable result was obtained at approximately iteration 414700 out of 1,030,301:

```
Kp = 20.0
Ki = 1.5
Kd = 45.5
Final Value        = 1.0000
Steady-State Error = 0.0000
Overshoot          = 1.14%
Settling Time      = 1.9510 min
```

These values were obtained in the noise-free case.

3. Simulink Implementation and Refinement

A Simulink model was then built using the provided biomedical feedback diagram.

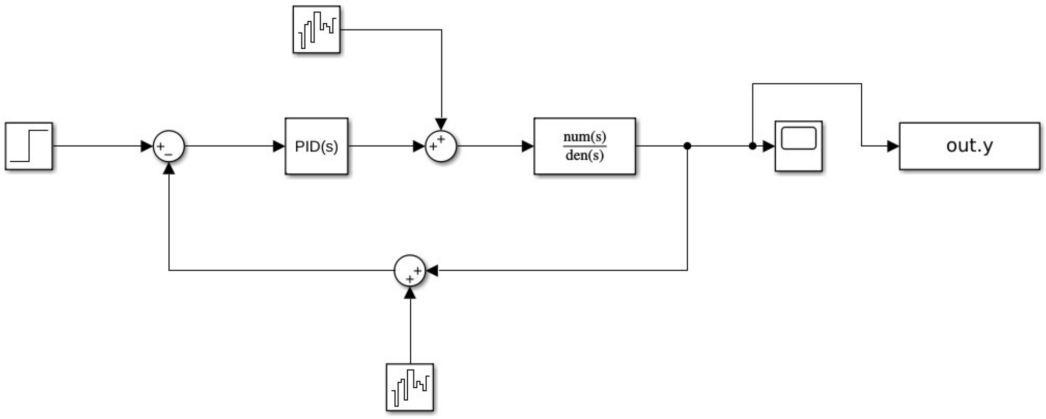

Figure 1: Simulink implementation of the noisy closed-loop biomedical control system.

The noise power was set to:

$$10^{-5}$$

Using the grid-search gains in Simulink gave a stable response with small fluctuations around the reference due to noise. Since it was not practical to include the full code in this report, it has been uploaded to the GitHub repository: pid-controlsystems-project.

To improve the practical response further, manual refinement was performed. The final selected gains were:

$$K_p = 23.5, \qquad K_i = 1.5, \qquad K_d = 45.5 \tag{6}$$

This produced the following response:

```
Final Value: 0.9999
Steady-State Error: 0.0001
Overshoot (%): 1.82
Rise Time: 1.1469
Settling Time: 1.6000
```

Figure 2: Final tuned PID gains used in the Simulink model.

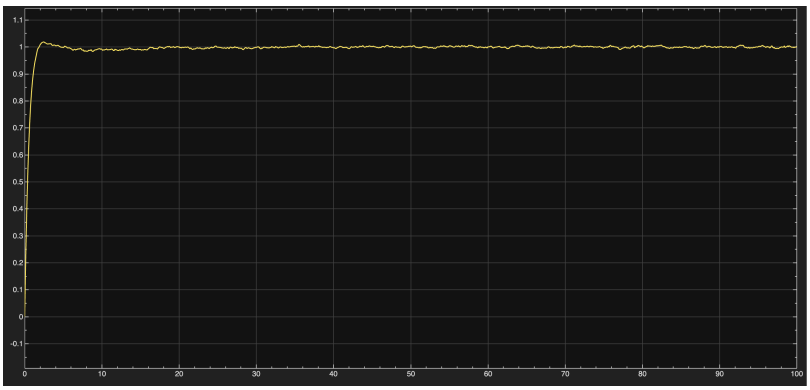

Figure 3: Step response showing a rapid rise with slight overshoot, followed by settling near the steady-state value of 1.0 with small residual fluctuations over the interval 0–100.

An important correction during evaluation was that the Step block had initially been set to a step time of 1 minute,

which artificially increased the measured settling time. After correcting the step time to 0, the effective settling-time requirement was satisfied correctly.

4. Conclusion

A PID controller was designed for the automated drug infusion model using the transfer function $G(s) = \frac{1}{(\tau_1 s+1)(\tau_2 s+1)}$, with $\tau_1 = \tau_2 = 5$ chosen to represent slower and more realistic physiological dynamics than the initially tested case of $\tau_1 = 1, \tau_2 = 2$. The controller parameters were first obtained through an exhaustive grid search with a penalty-based score function that prioritized low steady-state error, overshoot below 5%, and settling time below 2 minutes. This search produced a valid noise-free solution near iteration 414700, with $K_p = 20$, $K_i = 1.5$, and $K_d = 45.5$.

The controller was then implemented in Simulink with actuator and sensor noise added to the loop. Under noisy conditions, the output remained stable and closely tracked the reference, showing good robustness. Further manual refinement led to the final gains $K_p = 23.5$, $K_i = 1.5$, and $K_d = 45.5$, which gave negligible steady-state error, overshoot within the specified limit, and a fast response. Overall, the project showed that combining systematic grid search with practical simulation-based refinement is an effective way to design a high-performance controller for biomedical systems.