| REVISION HISTORY | | | |
|---|---|---|---|
| REV | DESCRIPTION | DATE | APPROVED |
| | | | |

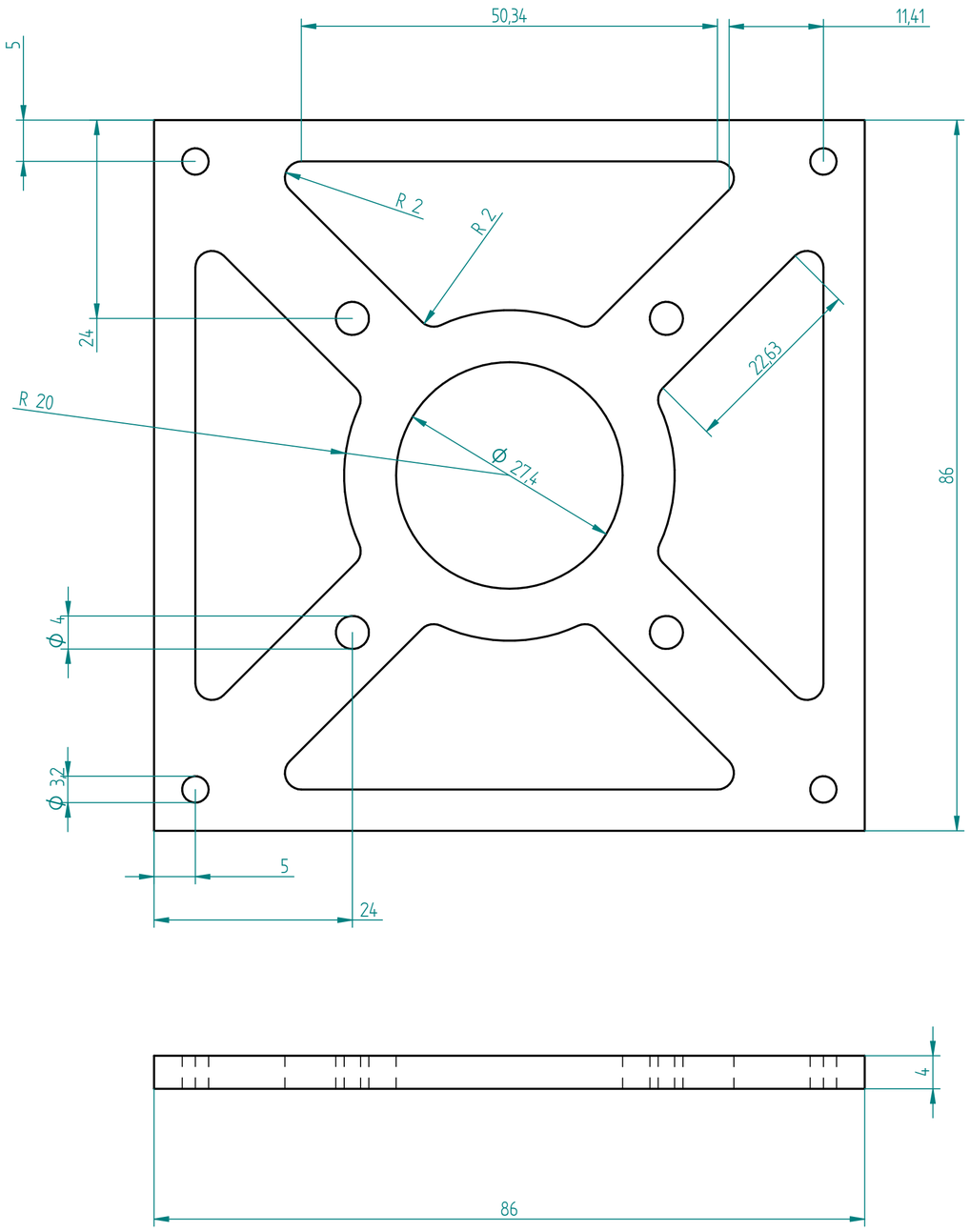


SOLID EDGE ACADEMIC COPY

| | NAME | DATE |
|---|---|---|
| DRAWN | João Pedro Bastos | 26/07/19 |
| CHECKED | | |
| ENG APPR | | |
| MGR APPR | | |

UNLESS OTHERWISE SPECIFIED
DIMENSIONS ARE IN MILLIMETERS
ANGLES ±X.X°
2 PL ±X.XX 3 PL ±X.XXX

Solid Edge

TITLE

SIZE A2 | DWG NO | REV

FILE NAME: 2D Prateleira Motor.dft

SCALE: | WEIGHT: | SHEET 1 OF 1