ISLAMIC UNIVERSITY OF TECHNOLOGY (IUT)

ORGANISATION OF ISLAMIC COOPERATION (OIC)

Department of Computer Science and Engineering (CSE)

QUIZ-2 **WINTER SEMESTER, 2024-2025**

DURATION: 40 MINUTES **FULL MARKS: 20**

CSE 4309: Theory of Computing

Programmable calculators are not allowed. Write your Student ID at the top of your extra pages (if any).

Answer **all 4 (four)** questions. Figures in the right margin indicate full marks of questions whereas corresponding CO and PO are written within parentheses.

STUDENT ID:

---

1. What is the formal definition of a Non-deterministic Finite Automaton (NFA)? 3 (CO1) (PO1)

Solution:

A non-deterministic finite automaton N is 5-tuple:

$$N = \langle Q, \Sigma, \delta, q_0, F \rangle$$

- Q is a finite set of **states**
- Σ is a finite set of **symbols**, and it consists of the empty string $(\Sigma \cup \{\epsilon\})$
- $\delta : Q \times \Sigma \to \mathcal{P}(Q)$ is the **transition function**
- $q_0 \in Q$ is the **initial state**
- $F \subseteq Q$ is the set of **final states**

Rubric:

- 0.5 point for each correct aspect of the definition.

2. Prove that the class of regular languages is closed under the concatenation operation. 4 (CO2) (PO1)

Solution:

We have regular languages A_1 and A_2 and want to prove that $A_1 \circ A_2$ is regular. The idea is to take two NFAs, N_1 and N_2 for A_1 and A_2, and combine them into a new NFA N as we did for the case of union, but this time in a different way, as shown in Figure 1.

Assign N's start state to be the start state of N_1. The accept states of N_1 have additional ε arrows that nondeterministically allow branching to N_2 whenever N_1 is in an accept state, signifying that it has found an initial piece of the input that constitutes a string in A_1. The accept states of N are the accept states of N_2 only. Therefore, it accepts when the input can be split into two parts, the first accepted by N_1 and the second by N_2. We can think of N as nondeterministically guessing where to make the split.

Proof. Let $N_1 = (Q_1, \Sigma, \delta_1, q_1, F_1)$ recognize A_1, and $N_2 = (Q_2, \Sigma, \delta_2, q_2, F_2)$ recognize A_2. Construct $N = (Q, \Sigma, \delta, q_1, F_2)$ to recognize $A_1 \circ A_2$.

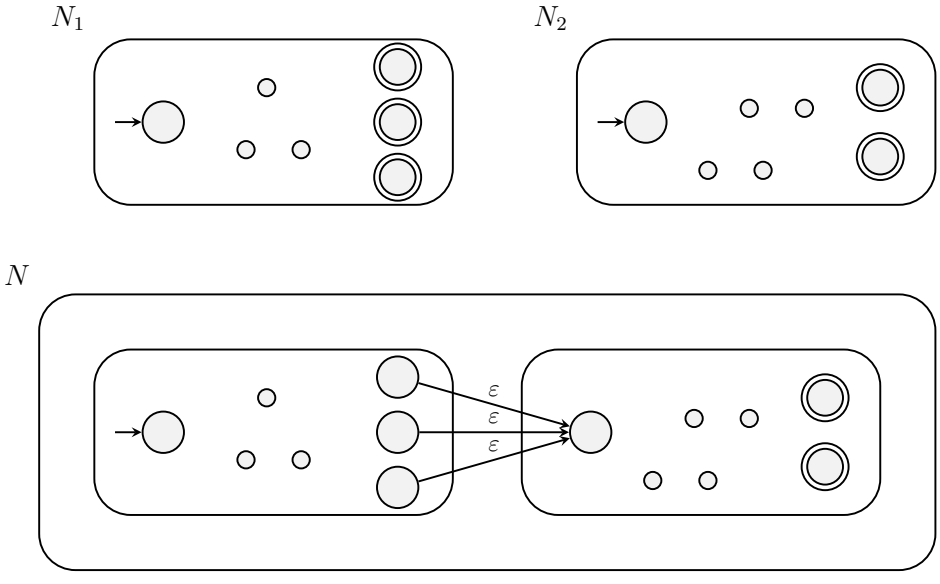

Figure 1: Construction of N to recognize $A_1 \circ A_2$

1. $Q = Q_1 \cup Q_2$.
   The states of N are all the states of N_1 and N_2.
2. The state q_1 is the same as the start state of N_1.
3. The accept states F_2 are the same as the accept states of N_2.
4. Define δ so that for any $q \in Q$ and any $a \in \Sigma_\varepsilon$,

$$\delta(q,a) = \begin{cases} \delta_1(q,a) & q \in Q_1 \text{ and } q \notin F_1, \\ \delta_1(q,a) & q \in F_1 \text{ and } a \neq \varepsilon, \\ \delta_1(q,a) \cup \{q_2\} & q \in F_1 \text{ and } a = \varepsilon, \\ \delta_2(q,a) & q \in Q_2. \end{cases}$$

□

Rubric:

- 4 points for a correct proof.

3. Create NFA for the following simple regular expressions: 0.5×8 (CO3) (PO1)

(a) ϕ (b) ϵ (c) $\mathtt{a} + \mathtt{b}$ (d) $\mathtt{ab}$

(e) $(\mathtt{a} + \mathtt{b})^*$ (f) $\mathtt{a}^+$ (g) $\mathtt{a}^*\mathtt{b}$ (h) $(\mathtt{ab})^*$

Solution:

(a) ϕ

(b) ϵ

(c) $\mathtt{a} + \mathtt{b}$

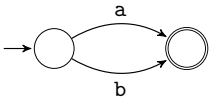

(d) $\mathtt{ab}$

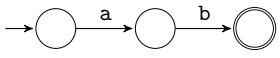

(e) $(\mathtt{a} + \mathtt{b})^*$

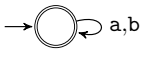

(f) $\mathtt{a}^+$

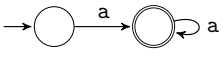

(g) $\mathtt{a}^*\mathtt{b}$

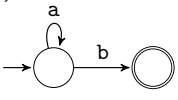

(h) $(\mathtt{ab})^*$

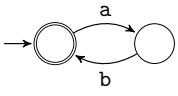

Rubric:

- 0.5 point for a correct NFA.

4. Consider the following regular language: $2 + 3$

$L = \{w \in \{0,1\}^* \mid w$ does **not** contain 101 as a substring$\}$ (CO3)

a) Create the DFA that recognizes L. (PO1)

b) Prove that the regular expression that represents L is $R(L) = (0 + 1^*100)^*(1^* + 11^*0)$.

Solution:

a)

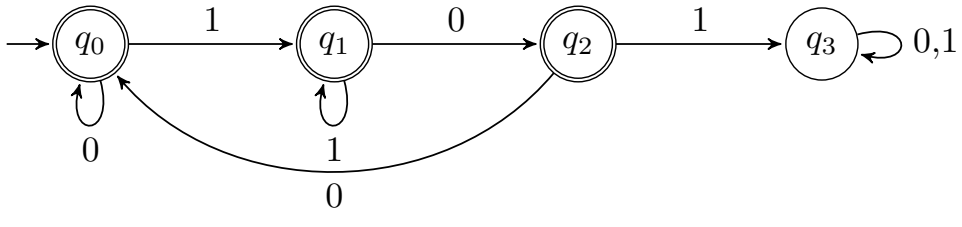

b) From the DFA, we can derive the following equations:

$$q_2 = q_1 0 \qquad \text{(i)}$$

$$q_1 = q_0 1 + q_1 1 \qquad \text{(ii)}$$

$$= q_0 11^* \qquad \text{[Applying Arden's theorem] (iii)}$$

$$q_0 = \epsilon + q_0 0 + q_2 0 \qquad \text{(iv)}$$

We have to find $q_0 + q_1 + q_2 = ?$ as these are the three accept states.

Substituting the value of q_1 from (iii) to (i), we get,

$$q_2 = (q_0 1 + q_1 1)0$$

$$= q_0 10 + q_1 10 \qquad \text{(v)}$$

Substituting the value of q_2 from (v) to (iv), we get,

$$\begin{aligned}
q_0 &= \epsilon + q_0 0 + (q_0 10 + q_1 10)0 \\
&= \epsilon + q_0 0 + q_0 100 + q_1 100 \\
&= \epsilon + q_0 0 + q_0 100 + q_0 11^* 100 && \text{[since, } q_1 = q_0 11^* \text{ from (iii)]} \\
&= \epsilon + q_0(0 + 100 + 11^*100) \\
&= \epsilon(0 + 100 + 11^*100)^* && \text{[Applying Arden's theorem]} \\
&= (0 + (\epsilon + 11^*)100)^* \\
&= (0 + 1^*100)^* && \text{(vi)}
\end{aligned}$$

Substituting the value of q_0 from (vi) to (iii), we get,

$$q_1 = (0 + 1^*100)^*11^* \qquad \text{(vii)}$$

Substituting the value of q_1 from (vii) to (i), we get,

$$q_2 = (0 + 1^*100)^*11^*0 \qquad \text{(viii)}$$

Now, from (vi), (vii), and (viii), we get,

$$\begin{aligned}
q_0 + q_1 + q_2 &= (0 + 1^*100)^* + (0 + 1^*100)^*11^* + (0 + 1^*100)^*11^*0 \\
&= (0 + 1^*100)^*(\epsilon + 11^* + 11^*0) \\
&= (0 + 1^*100)^*(1^* + 11^*0)
\end{aligned}$$

□

Rubric:

- 2 points for a correct DFA.
- 3 points for the correct regex derivation.

5. Consider the following NFA over the alphabet $\Sigma = \{\mathbf{a}, \mathbf{b}\}$: 4 (CO3) (PO1)

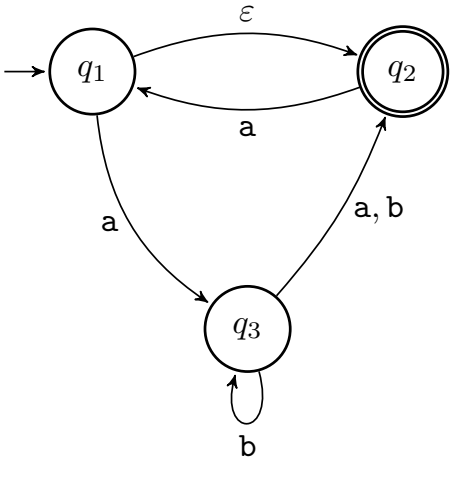

Convert this NFA to its equivalent DFA. Your DFA should have no more than 8 states.

Solution:

The DFA with 8 states looks something like:

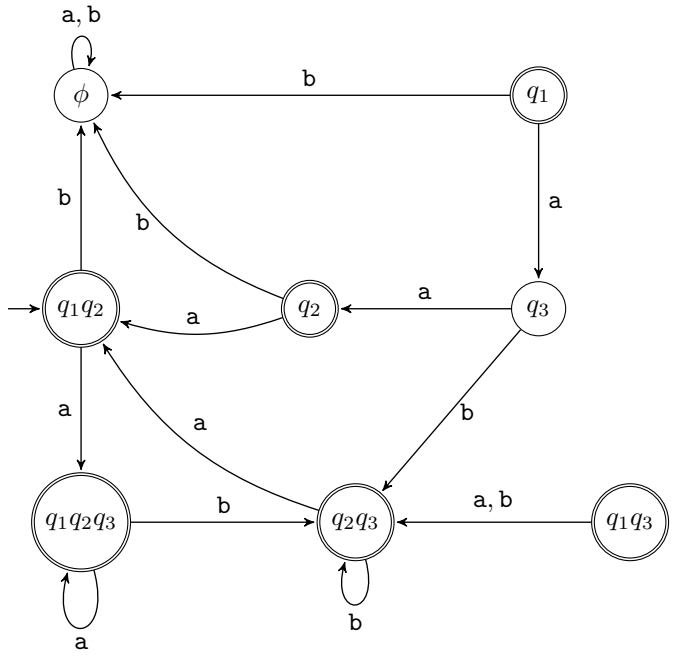

Once we prune the unreachable states, the DFA looks something like:

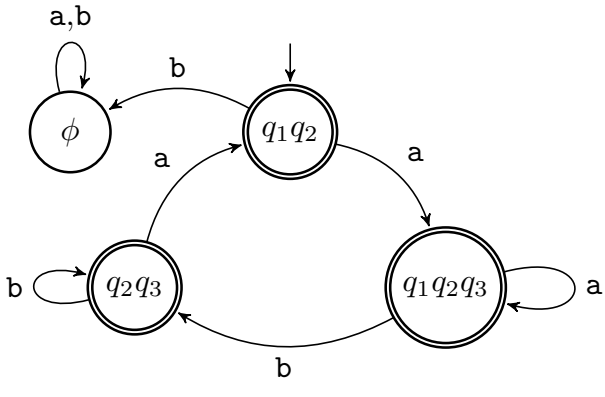

Rubric:

- 2 points for the correct 8-state DFA.
- 2 points for the correct pruned DFA.