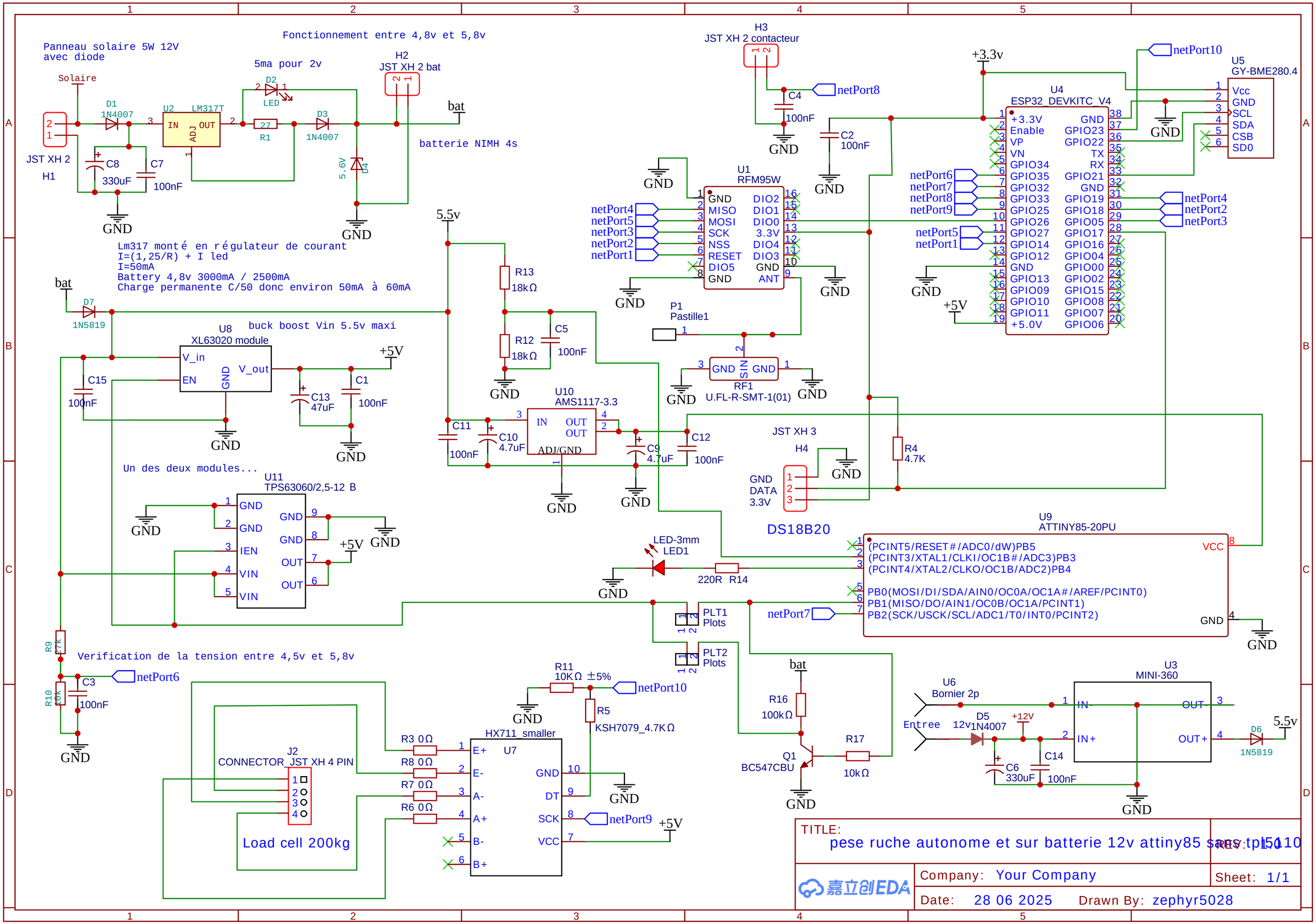
Panneau solaire 5W 12V
avec diode
Solaire
D1
1N4007
U2 LM317T
IN OUT
ADJ
JST XH 2
H1
C8
330uF
C7
100nF
GND
Fonctionnement entre 4,8v et 5,8v
5ma pour 2v
D2
LED
R1
27
D3
1N4007
5.6V
D4
H2
JST XH 2 bat
bat
batterie NIMH 4s
Lm317 monté en régulateur de courant
I=(1,25/R) + I led
I=50mA
Battery 4,8v 3000mA / 2500mA
Charge permanente C/50 donc environ 50mA à 60mA
D7
1N5819
U8
XL63020 module
buck boost Vin 5.5v maxi
V_in
EN
GND
V_out
+5V
C15
100nF
C13
47uF
C1
100nF
Un des deux modules...
U11
TPS63060/2,5-12 B
GND
IEN
VIN
OUT
5.5v
R13
18kΩ
R12
18kΩ
C5
100nF
C11
100nF
C10
4.7uF
U10
AMS1117-3.3
IN
OUT
ADJ/GND
C9
4.7uF
C12
100nF
H3
JST XH 2 contacteur
C4
100nF
netPort8
C2
100nF
U1
RFM95W
GND
MISO
MOSI
SCK
NSS
RESET
DIO5
DIO2
DIO1
DIO0
3.3V
DIO4
DIO3
ANT
netPort4
netPort5
netPort3
netPort2
netPort1
P1
Pastille1
RF1
U.FL-R-SMT-1(01)
SIG
+3.3v
U4
ESP32_DEVKITC_V4
+3.3V
Enable
VP
VN
GPIO34
GPIO35
GPIO32
GPIO33
GPIO25
GPIO26
GPIO27
GPIO14
GPIO12
GPIO13
GPIO09
GPIO10
GPIO11
+5.0V
GPIO23
GPIO22
TX
RX
GPIO21
GPIO19
GPIO18
GPIO05
GPIO17
GPIO16
GPIO04
GPIO00
GPIO02
GPIO15
GPIO08
GPIO07
GPIO06
netPort6
netPort7
netPort8
netPort9
netPort10
netPort4
netPort2
netPort3
+5V
U5
GY-BME280.4
Vcc
SCL
SDA
CSB
SD0
JST XH 3
H4
DATA
3.3V
R4
4.7K
DS18B20
U9
ATTINY85-20PU
(PCINT5/RESET#/ADC0/dW)PB5
(PCINT3/XTAL1/CLKI/OC1B#/ADC3)PB3
(PCINT4/XTAL2/CLKO/OC1B/ADC2)PB4
PB0(MOSI/DI/SDA/AIN0/OC0A/OC1A#/AREF/PCINT0)
PB1(MISO/DO/AIN1/OC0B/OC1A/PCINT1)
PB2(SCK/USCK/SCL/ADC1/T0/INT0/PCINT2)
VCC
LED-3mm
LED1
220R R14
PLT1
Plots
PLT2
Plots
R9
27K
R10
10K
Verification de la tension entre 4,5v et 5,8v
C3
100nF
R11
10KΩ ±5%
R5
KSH7079_4.7KΩ
HX711_smaller
U7
E+
E-
A-
A+
B-
B+
DT
SCK
R3 0Ω
R8 0Ω
R7 0Ω
R6 0Ω
J2
CONNECTOR_JST XH 4 PIN
Load cell 200kg
R16
100kΩ
Q1
BC547CBU
R17
10kΩ
U6
Bornier 2p
Entree
12v
D5
1N4007
+12V
C6
330uF
C14
100nF
U3
MINI-360
IN
IN+
OUT
OUT+
D6
1N5819
5.5v
TITLE:
pese ruche autonome et sur batterie 12v attiny85 sans tp4510
REV: 1.0
Company: Your Company
Sheet: 1/1
Date: 28 06 2025
Drawn By: zephyr5028
嘉立创EDA