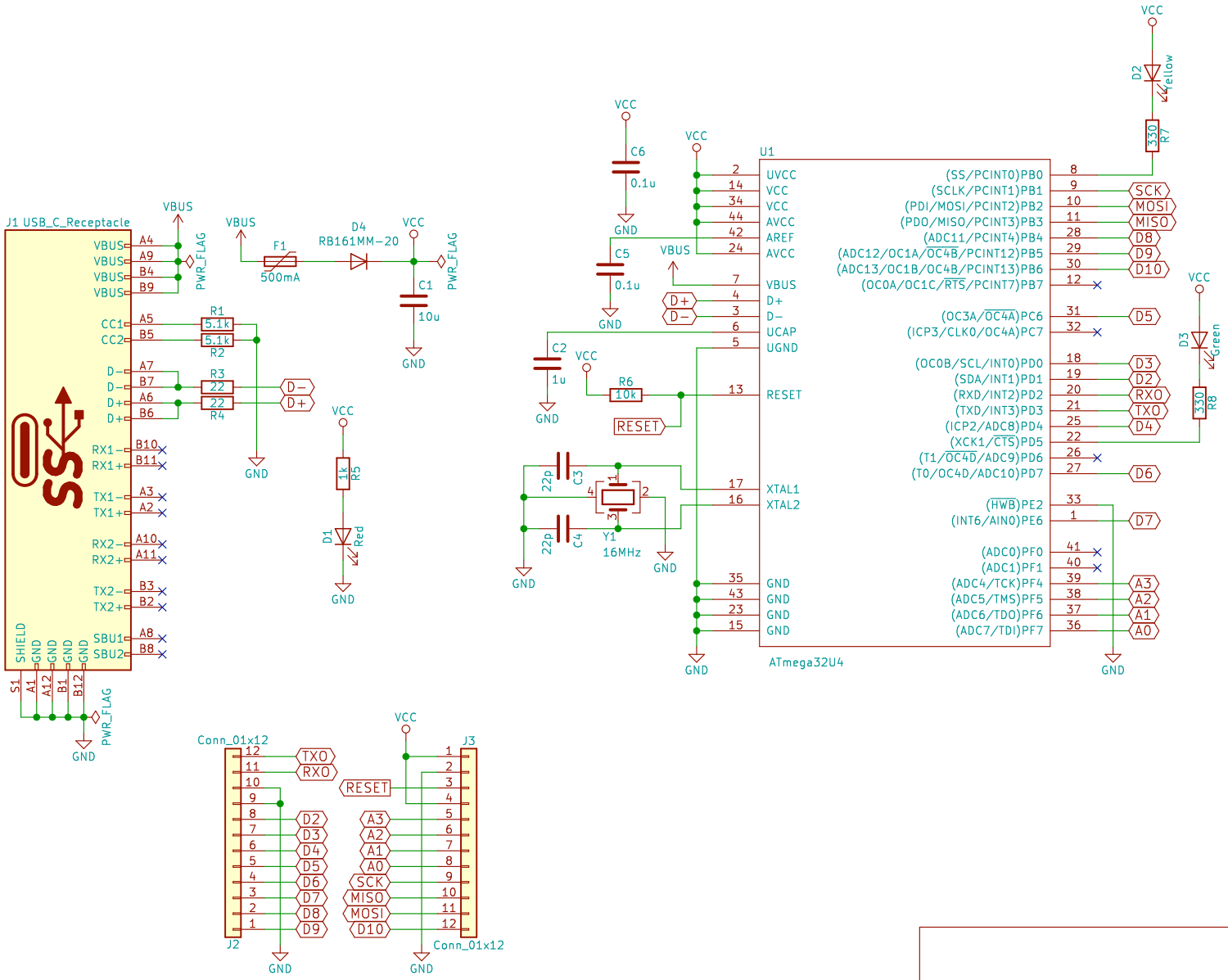

Sheet: /
File: c−pro−micro.sch

Title:

Size: A4	Date:	Rev:
KiCad E.D.A. kicad (5.0.2−4−g3082e92af)		Id: 1/1