09/03/2026

CACULATOR WITH KEYPAD AND I

Page	Content
1.	Cover page
2.	Block diagram
3.	Power tree
4.	Schematic

VIETNAM NATIONAL UNIVERSITY HO CHI MINH CITY
HO CHI MINH CITY UNIVERSITY OF TECHNOLOGY

PORTABLE CACULATOR		
Title: Main system	Course: Embedded System Design	
Designed by: Group 3	Instructed by: MSc. Bui Quoc Bao	
	Sheet 1 of 1	Size: A3
	Version: 1.0.0	Date: 13/2/2026

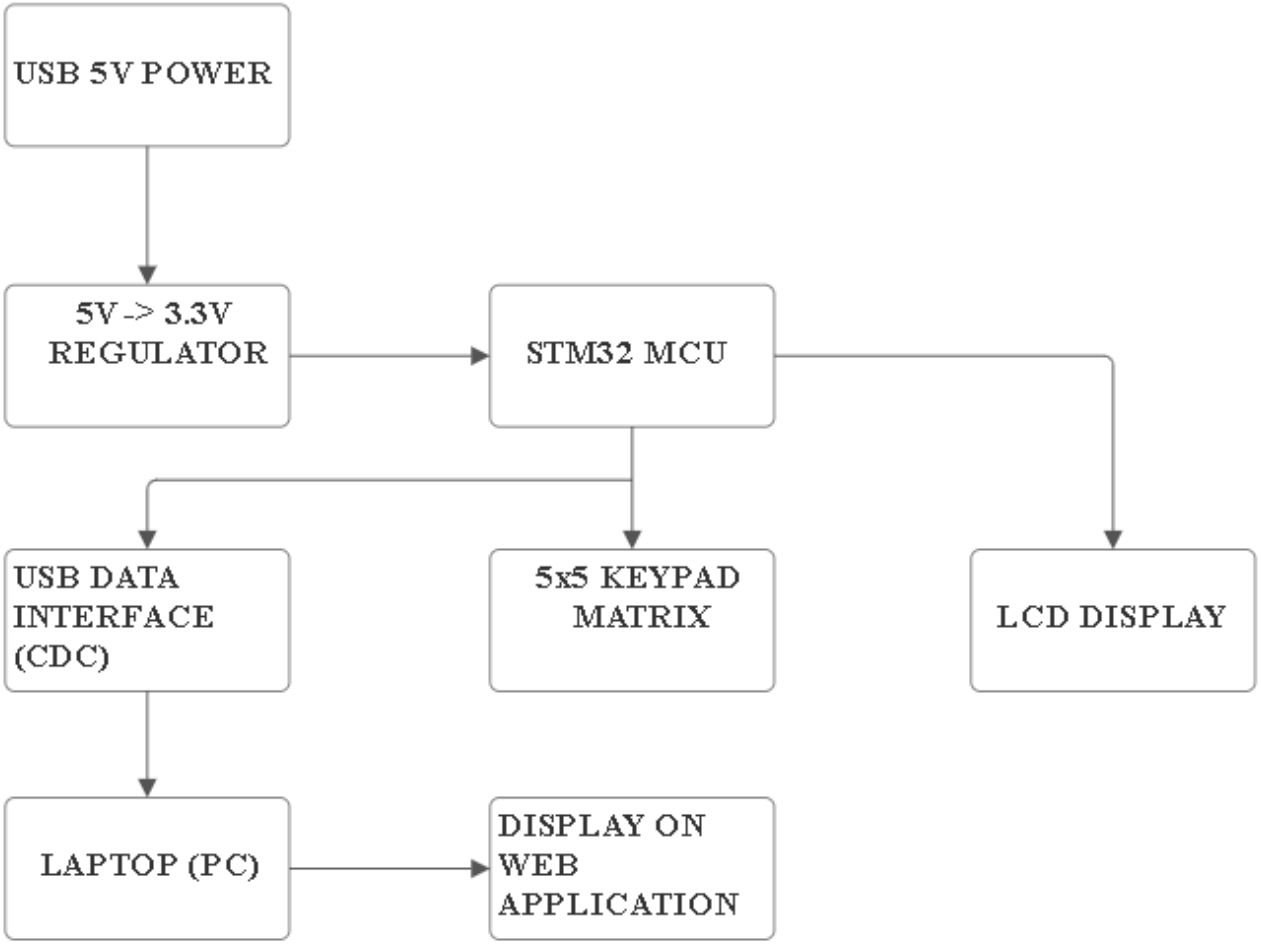

PORTABLE CACULATOR		
Title: Main system	Course: Embedded System Design	
Designed by: Group 3	Instructed by: MSc. Bui Quoc Bao	
	Sheet 1 of 1	Size: A3
	Version: 1.0.0	Date: 13/2/2026

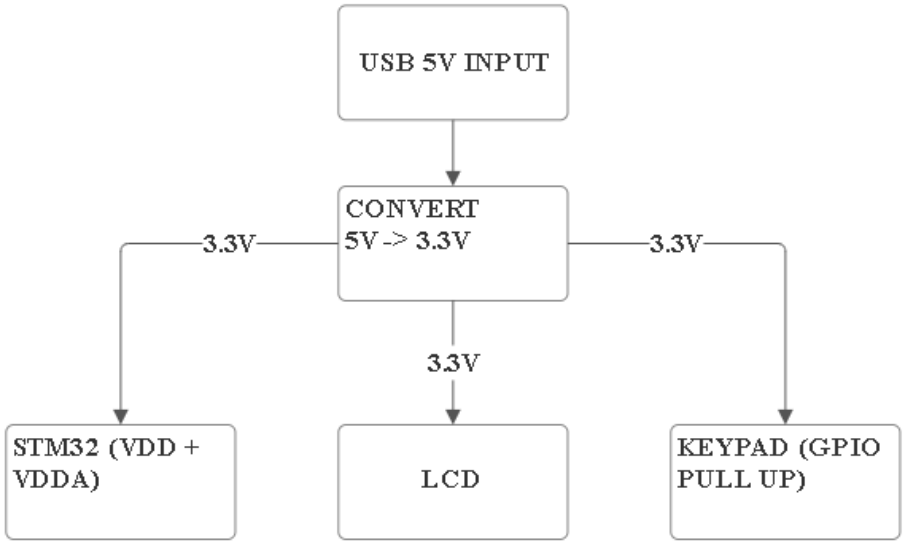

PORTABLE CACULATOR

Title: Main system	Course: Embedded System Design	
Designed by: Group 3	Instructed by: MSc. Bui Quoc Bao	
	Sheet 1 of 1	Size: A3
	Version: 1.0.0	Date: 13/2/2026

Power supply (and USB)

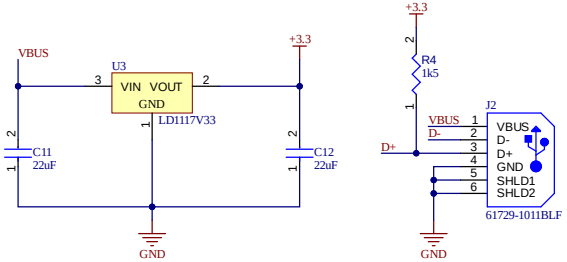

USB Data interface

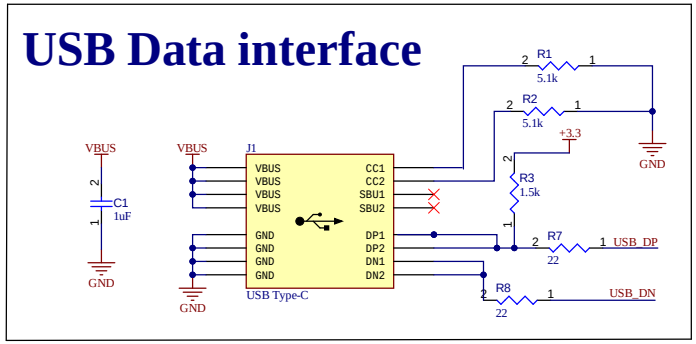

LCD

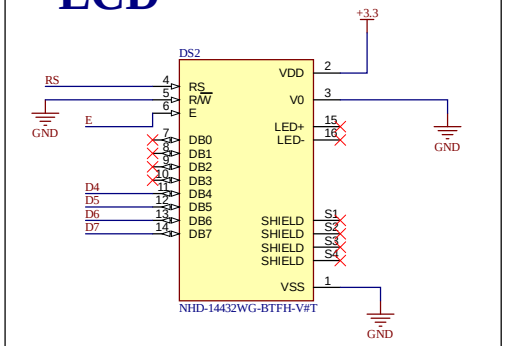

Microcontroller

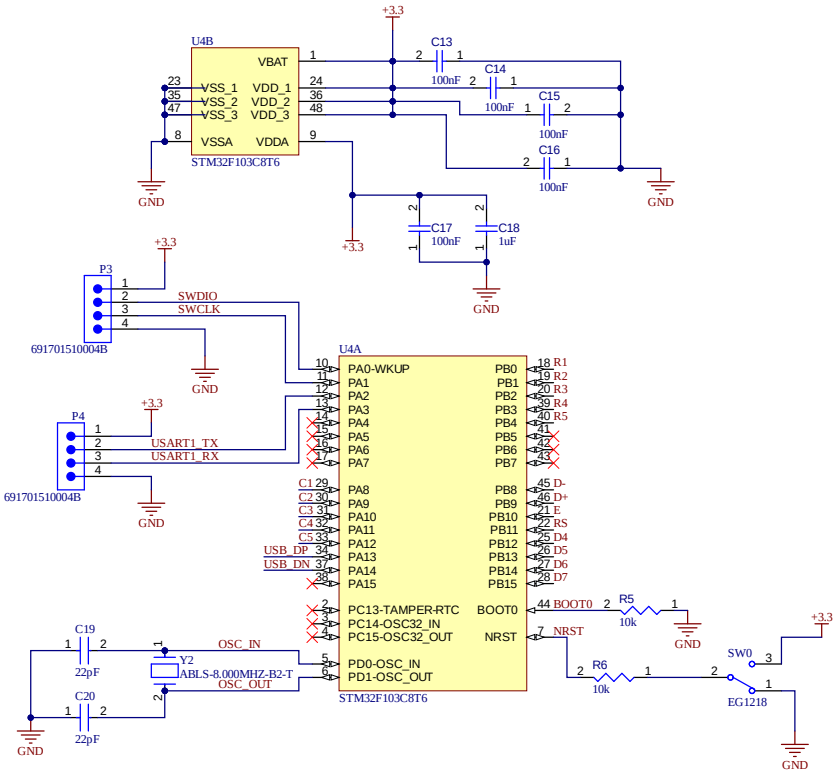

Button

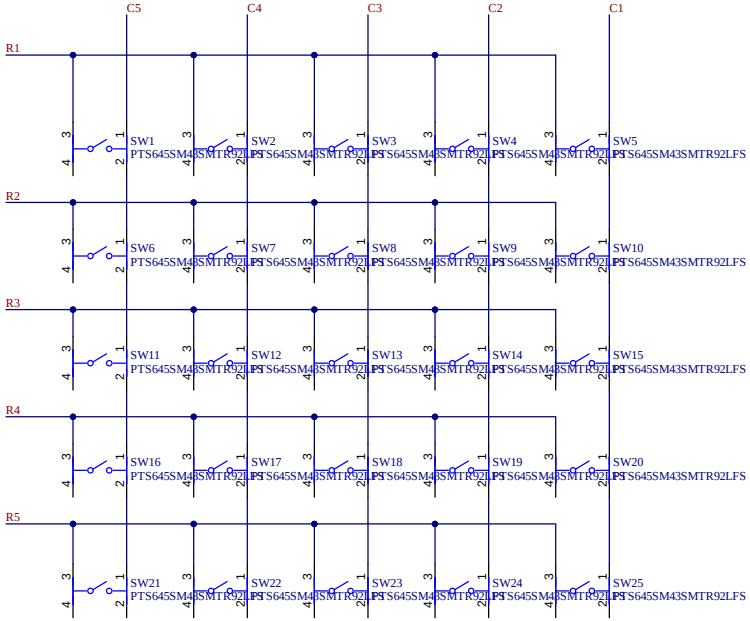

PORTABLE CACULATOR

Title: **Main system**	Course: **Embedded System Design**		
Designed by: **Group 3**	Instructed by: **MSc. Bui Quoc Bao**		
	Sheet **1** of **1**	Size: **A3**	
	Version: **1.0.0**	Date: **13/2/2026**	

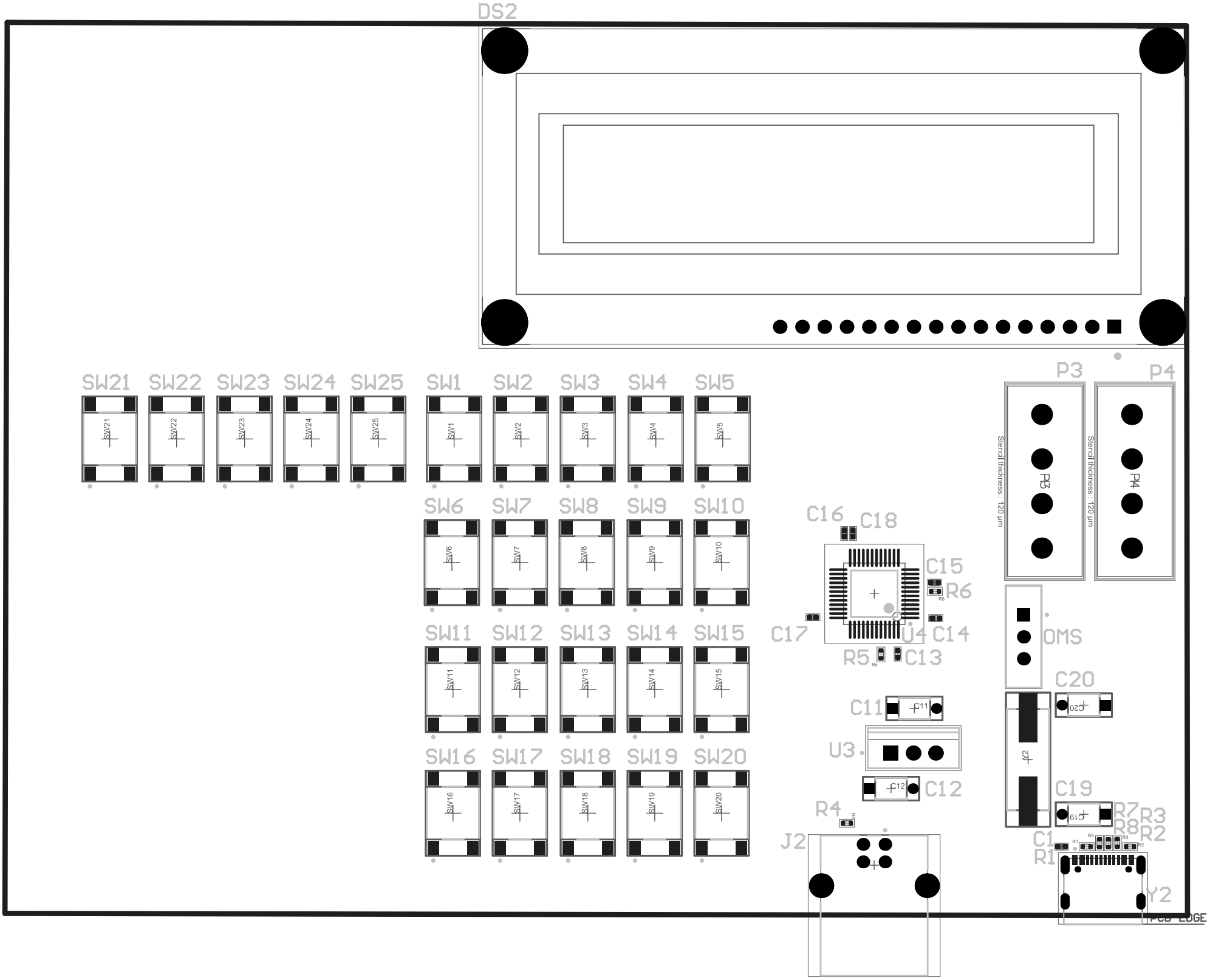
DS2
SW21
SW22
SW23
SW24
SW25
SW1
SW2
SW3
SW4
SW5
SW6
SW7
SW8
SW9
SW10
SW11
SW12
SW13
SW14
SW15
SW16
SW17
SW18
SW19
SW20
P3
P4
Stencil thickness : 120 µm
Stencil thickness : 120 µm
C16
C18
C15
R6
C17
U4
C14
R5
C13
OMS
C20
C11
U3
C12
K2
C19
R4
R7
R3
R8
R2
J2
C1
R1
Y2
PCB EDGE