Available online at www.sciencedirect.com

ScienceDirect

Advances in Space Research 73 (2024) 2674–2684

ADVANCES IN SPACE RESEARCH (a COSPAR publication)

www.elsevier.com/locate/asr

Mini modular plant design for ethylene production using Martian atmosphere on Mars

Ozgun Deliismail [a,*], Erol Seker [b]

[a] SOCAR Turkey Research & Development and Innovation Inc., Necmettin Giritlioglu Caddesi ARGE Binası Apt., Dkn:6 İkn:67 Aliaga, İzmir, Turkey
[b] Izmir Institute of Technology, Department of Chemical Engineering, Gulbahce, Urla 35430, Izmir, Turkey

Received 19 December 2022; received in revised form 16 November 2023; accepted 11 December 2023
Available online 15 December 2023

Abstract

A main shift in the competitive landscape of technology development is in 3D printing of complex articles made of variety of materials due to faster manufacturing and less human error in the production. In fact, it seems to be a viable candidate for the construction of structures for terrestrial and extraterrestrial life in future. Thus, new or damaged equipment in space explorations could be replaced instantly, and habitats could be manufactured using 3D printing in varying gravitational fields in the solar system. Among 3D printing materials, HDPE is commonly used in the projects, such as a prototype manufacturing or pipes or damp-proof membrane. This study initially focused on the preliminary design of the self-sustaining mini ethylene production plant from Martian atmosphere with scale-out architecture. UniSIM® was integrated with MATLAB® via CAPE-OPEN extension to design mini-ethylene production plant at low gravity. Ethylene capacity was found as 17.71 tons/year for 100 modules.
© 2023 COSPAR. Published by Elsevier B.V. All rights reserved.

Keywords: Ethylene; Mars; CO_2; UniSIM; Simulation; Sabatier

1. Introduction

Humanity has had aspirational mission to build self-sustaining civilization beyond Earth after the first artificial satellite, Sputnik 1, launched in 1957. Recently, the companies, such as Astrobotics, SpaceX, Nanoracks, and Spire, have invested extensively on orbit, launch downstream and space explorations. It seems a new renaissance in extraterrestrial and terrestrial innovations with £400 million of a forecasted global space economic market by 2030 (Parliament.uk, 2017). In the solar system, humanity have longed to colonize Moon and Mars due to operational and meteorological reasons. The main problem on planets other than Earth in the solar system is the existence of extreme conditions, such as inhabitable atmosphere, low surface pressure and lower/higher gravity etc. Therefore, suitable mathematical models to create sustainable planet beyond earth and decrease the capital and operational costs during and after colonization must be developed considering such extreme conditions. In fact, self-sufficient sustainable life support, chemical production and energy systems modeling should particularly be developed to produce chemicals, electricity, fuel and basic needs of person as water, oxygen, and food even before the arrival of first humans on other planets.

Space exploration and colonization necessitates certain chemicals being produced during the voyage because it is not feasible to take all the supplies from Earth to the space station or other planets. Thus, key chemicals must be produced under micro-gravity environment. There have been extensive research studies on International Space Station

* Corresponding author.
E-mail address: ozgun.deliismail@socar.com.tr (O. Deliismail).

https://doi.org/10.1016/j.asr.2023.12.028
0273-1177/© 2023 COSPAR. Published by Elsevier B.V. All rights reserved.

(ISS) to take a step further the production of chemicals and materials in space and to comprehend the impact of microgravity on phase interactions. One of these studies called Flow Chemistry Platform had been conducted on ISS by Beeler research group at Boston University and Space Tango Inc. to observe the effects of microgravity on fluid mixing and synthetic chemical reactions. The team designed and built a Flow Chemistry Cube Lab (FCCL) to investigate the reactions of peptide coupling reaction, water-based and mixed-phase colorimetric reactions for the synthesis of organic chemicals which are omnipresent for common items and pharmaceuticals. The team performed peptide coupling reaction to examine FCLL's performance on complex reactions. The other reactions were conducted to understand the effect of microgravity on fluid dynamics and chemical reactions (Space Station Research Explorer, 2022).

However, the adaptation of Earth like chemical unit operations into microgravity conditions would be significant to produce on-demand products in space, the impact of microgravity on the synthesis of materials used in chemical operations as adsorbents/absorbents and catalysts would be one of the important bottlenecks to sustain such operations in space. For instance, zeolites which are common absorbents for the separation of components in current petroleum processes, could be used to separate unreacted carbon dioxide from other components in Mars operations or in life support systems of any space missions. Akata et al. (2004) synthesized zeolite beta in ISS to investigate the impact of microgravity on the growth of zeolite crystals. The authors demonstrated that in the presence of space-grown zeolite, Meerwein-Ponndorf-Verley reduction performance of catalyst decreased compared to Earth-grown zeolites due to the change in Lewis acid sites by the impact of microgravity. The results showed that average crystal size of space-grown zeolite was obtained 10% larger compared to Earth-grown zeolite, although morphologies and framework of zeolites were similar.

Due to the engagement of specially surface tension, comprehension of two-phase flow behavior in microgravity would ease in-situ production of chemicals that uses two-phase reactors and separators and, it would also lead more efficient energy and life support systems in which two-phase flow exists especially for liquid fuel cells and water recovery systems. Motil et al. (2021) investigated the pressure drop and flow patterns for gas–liquid system in packed bed reactor in microgravity. The authors found that wettability of packing material has significant role for pressure drop in the viscous-capillary regime in which especially capillary force contributed to the pressure drop whereas at outside of viscous-capillary regime in which hysteresis effects were vanished, pressure drop was not dependent on the wettability of packing material.

In the realm of space exploration studies centered on the Moon, Mars emerges as a compelling candidate for future missions focused on exploring the potential exploitation of planetary resources, both within our solar system and beyond. Therefore, constructing 3D printed habitats on Mars necessitates the use of planet-made polymers, like high-density polyethylene. Regrettably, the conventional methods of designing and constructing chemical plants employed on Earth are not suitable for Mars. Constructing high quality habitats on Mars and terrestrial planets requires resilient infrastructures to achieve sustainability, and safety for human explorers. In fact, the extreme conditions on Mars like low surface pressure due to thinner atmosphere, high temperature fluctuations and low gravity greatly influence the selection and fabrication of construction materials. Therefore, the development of novel construction materials and handling techniques for terrestrial planets presents limitless frontier. For instance, Naser and Chehab (2018) highlighted two concepts for the construction material fabrication in space as: (i) in-situ resource utilization and (ii) harvesting elements, minerals, and materials during space missions. Both concepts focus on the similar approaches to develop novel techniques in the fabrication of the construction materials, particularly using regolith sourced from the surfaces of the Moon and Mars.

Abundance of metals in the soil of Martian and Lunar, such as aluminum, iron, magnesium, titanium, chromium, vanadium, and their oxide phases, serves viable alternative for the production of construction materials. Karl et al. (2022) listed the compositions of 12 different Mars simulants, making obvious that the metals present in these metal-rich soil could be extracted for the production of constructional materials. Moreover, in recent years, sulfur concrete is exploited due to the high content of FeS grains on the surfaces of Mars and the Moon (Naser, 2019). The sulfur inside FeS grain can be extracted and subsequently, used as a binding agent in soil mixture for construction applications. Contrary to this, direct use of Lunar or Martian regolith without separating metals can be favored in In-Situ Resource Utilization (ISRU) endeavors, particularly for the purpose of reducing operational expenses. Naser (2019) featured the polymeric concretes as a first choice for Lunar and Martian construction applications since they have promising durability characteristics, reduced water requirement and the ability to directly utilize surface regolith. Such concretes could be produced on-site by either sintering the surface regolith, known as geopolymers, or mixing polymer as binder with surface regolith, known as polymer-based concrete.

In addition to the polymers, such as polyester, epoxy, polypropylene and polyimide, high density polyethylene (HDPE) has gained great attention because it can be used in robotic extrusion of inflatable structures in the Martian environment or as a binding agent especially in the production of concretes for future habitats. Furthermore, the atmosphere of Mars which is primarily composed of carbon dioxide presents favorable opportunity for on-site production of HDPE. As an example, Flynn and Rosenberg (2005) examined ethylene synthesis using Martian atmosphere and its subsequent polymerization to HDPE. Also,

they successfully synthesized a fused constructional material using a simulant of JSC Mars soil and synthesized HDPE. Similarly, Sen et al. (2010) examined the manufacturing of the composite material using JSC-1 Martian simulant, designed specifically for radiation shielding purposes. Herein, they synthesized the composite material by using liquid infiltration and extrusion techniques in which polyethylene was added as a binding agent. The composite material they manufactured satisfied the basic requirements for passive radiation shielding, and mechanical properties of the material showed minimal changes. Furthermore, it demonstrated resilience to substantial thermal fluctuations. In addition to regolith bonding methods like sintering, melting, and powder pressing, additive manufacturing technology presents a viable alternative for constructing habitats on terrestrial planets using concrete-based materials. For instance, in 2019, Mueller et al. summarized NASA's phase III in the 3D Printed Habitat Centennial Challenge. In the X-Arc Habitat Concept, they described how to extrude a combination of polyethylene and basalt to fabricate the shell structure. Additionally, as a part of NASA's 3D Printed Habitat Challenge, Troemner et al. (2022) introduced a novel construction material, known as "Marscrete", containing regolith, sulfur, and polyethylene, which was designed specifically for 3-D printing in the Martian environment.

Unfortunately, the conventional method of designing and constructing chemical plants on Earth is not suitable for Mars due to the substantial transportation costs, varying from 150,000 $/kg to 400,000 $/kg for cargo transport to Mars, as outlined by Flynn and Rosenberg (2005). In contrast, the transportation cost for Moon travel falls within the range of 5,000 $/kg to 20,000 $/kg for cargo transport, as noted by Naser (2019). To address these challenges, a modular and flexible self-sustaining mini-plant emerges as a viable solution. This approach facilitates large-scale production through a scale-out strategy, diverging from the traditional scale-up approach that involves costly pilot plant and demonstration stages, demanding extensive know-how and manpower. Modular design of such a production system would not robustly depend on man-power due to the existence of built-in smart process control systems. Among many chemicals, ethylene, feedstock for polyethylene, could be plausible contender to be produced in modular mini-plant systems using available resources on Mars for further applications.

From day to day, the efforts of researchers have introduced new advances in science and technology addressing multiplanetary life by findings on gravitational effects on Earth-like systems. Among all advances in space science, in-situ production of chemicals and goods arouses researchers' interest and there have been many studies which triggers the literature through distinct aspects of in-situ production. Therefore, it sounds intriguing to gather these overwhelming findings into one pot for the implementation of in-situ chemical production system at low gravity via commercial process simulators. Commonly, commercial process simulators as UniSIM®, Aspen Engineering Suite and Chemcad are mainly used in the simulation of unit operations in chemical industry. When the power of these software remains incapable to handle complex simulation and/or optimization cases, new communication platforms or AI-based algorithms are used to make communication between commercial or open-source platforms to enhance the capabilities.

Among various available platforms, researchers would typically prefer utilizing MATLAB® and its embedded toolboxes for interfacing with simulators or developing custom programs for modelling unit operations and process control systems. Choi et al. (2019) studied the superstructure optimization of MEA-based CO_2 capture system for varied flue gas inlet specifications sourced from distinct industries. In the study, UniSIM® being used to simulate the superstructure configuration, was linked to MATLAB® optimization solver in which built-in algorithms were used for the optimization. The simulation of superstructure configuration by UniSIM® took 1–5 s while 3–5 h were necessary for the optimization calculations by Genetic Algorithm available in MATLAB®. In the other study conducted by Karimi et al. (2011), UniSIM® and MATLAB® were integrated to investigate the intercooling effect in MEA-DEA based CO_2 capture system. Only absorber simulation was carried out instead whole plant simulation due to long computing time. In the study, MATLAB® initiated the simulation and altered the intercooler position in UniSIM® which sent converged data back to MATLAB® for comparison of results. Hintze et al. (2018) studied the simulation of Sabatier reaction for Mars in-situ resource utilization propellant production plant via COCO simulator. The authors used equilibrium reactor and condenser in distinct configurations whereas the authors did not prefer kinetic-driven reactor operation due to thermal management difficulties and, there were no detailed information on modelling equations of unit operations including low gravity impacts or on ways to overcome gravitational effects (e.g., surface tension effects in condenser).

While there are various simulation studies in the literature, to the best of our knowledge, there are no simulation studies conducted using conventional simulation environments like Honeywell UniSIM® R460 integrated with MATLAB® for a self-sustaining miniature ethylene production plant using Martian atmosphere under reduced gravitational acceleration. In this study, reduced gravitational acceleration, low Martian atmospheric pressure and daily extreme atmospheric temperature changes have been considered in the modelling and simulation of self-sustaining mini ethylene production plant using Martian atmosphere as the carbon source.

2. Modelling

The self-sustaining mini ethylene production plant was designed to integrate reactor and purification units in one

module; thus, scale-out approach could be used to achieve desired ethylene capacity. One mini-plant module could fit in 2.83 m × 1.44 m × 1.62 m container; thus, making ethylene production more flexible, easy-to-operate and safer. Besides, modular approach enables Martian settler to add new modules to increase the capacity or easily replace the faulty module in case of failure. In this simulation study, 17.71 tons/year of ethylene using 100 modules is produced with Martian atmosphere containing 6 kg/h CO_2 per one module. Fig. 1 shows the process flow diagram for one module.

In this study, Honeywell UniSIM® Design R460 was used as simulation environment to simulate ethylene production mini-plant from Martian atmosphere at steady-state. In simulations, the accurate predictions of physical and thermodynamic properties of pure compounds and their mixtures are as important as the design itself. Among many volumetric equations of state, Peng-Robinson equation of state is mostly used for natural gas, pure hydrocarbons, and their mixtures because it shows great advantage in the prediction of liquid densities when compared to The Soave-Redlich-Kwong (SRK) equation (Peng and Robinson, 1976). For instance, Hintze et al. (2018) used Peng-Robinson equation of state in the simulation of Sabatier reactions in COCO for Mars propellant production plant. Yan et al. (2007) used Peng-Robinson equation of state in their study in which thermal diffusion process under microgravity condition using g-jitter data of ISS. Sofonea (1996) mentioned that two-phase fluid column showed an ideal gas behavior at temperatures above the critical point. Cuoci et al. (2005) also used ideal gas law in the modelling of unsteady state combustion of n-heptane droplets in microgravity. Similarly in this study, all thermodynamic and physical properties of components were obtained from Peng-Robinson fluid package as base method available in UniSIM® Design R460.

UniSIM® R460 is a software primarily tailored for simulating chemical processes under Earth's conditions, with a default gravitational acceleration of 9.81 m/s2. This means that the software's inherent design calculations for chemical process units rely on robust equations, including mass and energy balances and fluid dynamics equations, which are specifically formulated for Earth's environment. Unfortunately, the software does not offer an option to modify the gravitational value. Consequently, for our research, we developed customized models for the primary units using MATLAB® in which we formulated and solved comprehensive equations while considering the gravitational value of Mars.

Our process design encompassed various components such as reactors, separators, heat exchangers, and auxiliary units. The influence of gravity on these units is significant. For instance, variations in gravity directly impact factors like pressure drop inside R-101, which, in turn, can lead to substantial changes in the calculated reactor size. Additionally, due to the alterations in pressure along the reactor's length, the kinetics of the reactions are affected, resulting in changes to conversion and yield values. Furthermore, we also designed two-phase separators to withstand an acceleration of 6 times the force of gravity. Any alteration in the gravitational value will have a notable impact on the sizes and efficiencies of the process units, making it essential to adapt and optimize the designs modifying gravitational value in the software. Therefore, instead of using predefined units in UniSIM® Design R460 (e.g., equilibrium reactor, yield-shift rector, condenser etc.), main units operated under lower gravity were programmed in MATLAB® computing environment that communicated with UniSIM® R460 via CAPE OPEN extension. CAPE-OPEN extension introduces an interface in simulation environment for MATLAB® programming so it gives easiness to embed MATLAB® code into simula-

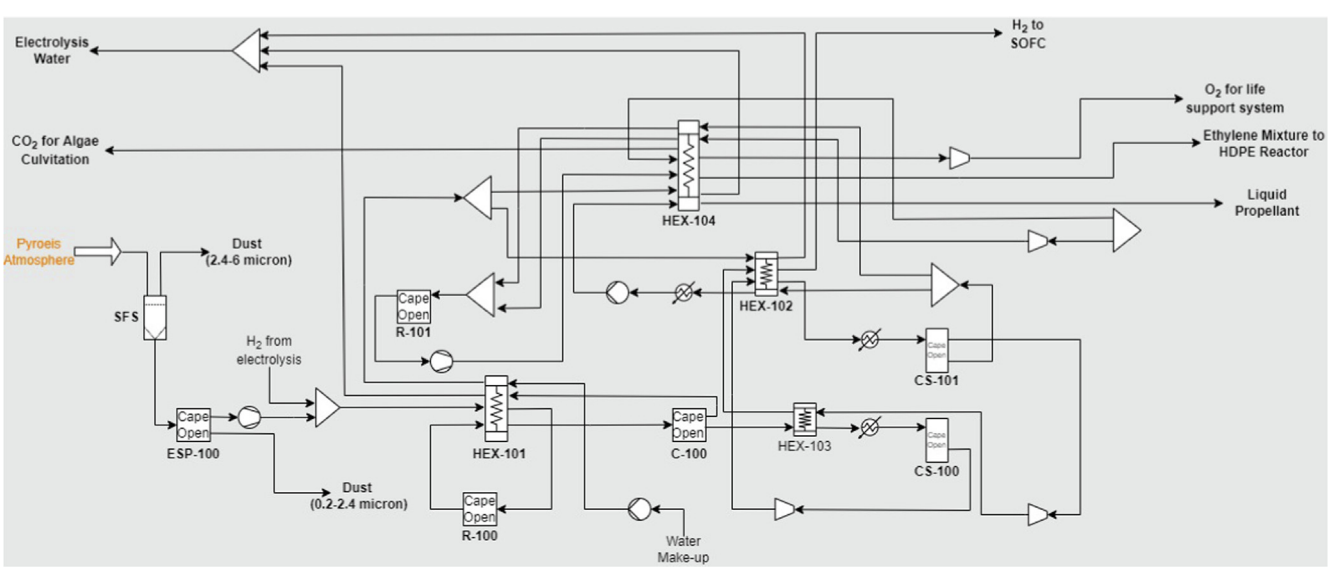

Fig. 1. Flow Diagram of Ethylene Production Process for a Module.

tion environment; thus, the usage of time buffer in MATLAB® or such an Open Platform Communication Link (OPC) link creation between the programs were avoided. Input streams are initially defined in UniSIM®, and custom models written in MATLAB® uses this information based on thermodynamic and physical properties in UniSIM® databank and the results of product streams are introduced in UniSIM®. Fig. 2 shows the description of UniSIM® and MATLAB® integration via CAPE-OPEN extension.

In the design of each unit, we expressed all the modeling equations as ordinary differential equations, and then we employed the MATLAB® software to solve stiff differential equations, utilizing the ode23s solver function. The custom models developed in MATLAB® for each unit, encompassing the dust collector, reactor, condensers, and gas–liquid separators, offer the flexibility to adjust the gravitational conditions to the desired value. This adaptability allows for their utilization in diverse research endeavors, accommodating studies focused on Earth, Lunar conditions, or other terrestrial planets.

Martian atmosphere is used to supply the carbon dioxide to each module but the size of suspended particles in Martian atmosphere is known to change from 0.1 μm to 6 μm. Therefore, inlet Martian gas must be cleaned of Marian dust to prevent accumulation of dust particles inside the modules. Martian dust particle was defined in UniSIM® R460 as miscellaneous solid by using the properties given in the study of Perko et al. (2002). To evaluate particle size distribution, modified gamma function was used (Landis, 1996), and the values in the equation was set by using Pollack model (the equation (1) below) to calculate total number of particles per unit volume (Toon et al., 1977).

$$n(r) = kr^2 \exp\left[-4\left(\frac{r}{r_m}\right)^{0.5}\right] \tag{1}$$

Where k is a constant and r_m is Modal Radius. Evaluated particle size distribution was also defined for identified Martian dust in the simulation environment.

Screen roll filter and impactor filter in scroll filter assembly, developed in NASA's Glenn Research Center (Perry and Agui, 2017), could be used to collect dust ranging from 2.4 to 6 μm. Besides, wire-cylinder electrostatic precipitator was designed to collect dust particles for most penetrating particle size (MPPS) range of 0.2 μm to 2.4 μm. The calculations of wire-cylinder electrostatic precipitator were adopted using the study conducted by Clements et al. (2011) as NASA ISRU project.

After removing the dust particles from inlet stream, carbon dioxide rich Martian atmosphere was reacted with hydrogen coming from Static Feed Electrolysis Module (Powell et al., 1974) at 93.3 °C and 12.70 atm, in methanation reactor, R-100. The reaction kinetics was for Sabatier reaction and the side reaction of reverse water gas shift (RWGS) occurring in the presence of $Ni/MgAl_2O_4$ catalyst in the operating temperature range of 300–400 °C as shown below (Xu and Froment, 1989);

$$\text{step 1}: CO_2 + H_2 \rightleftharpoons CO + H_2O \tag{2}$$

$$-r_1 = \frac{\frac{k_1}{p_{H_2}}\left(p_{CO}p_{H_2O} - \frac{p_{H_2}p_{CO_2}}{K_1}\right)}{(DEN)^2} \tag{3}$$

$$\text{step 2}: CO_2 + 4H_2 \rightleftharpoons CH_4 + 2H_2O \tag{4}$$

$$-r_2 = \frac{\frac{k_2}{p_{H_2}^{3.5}}\left(p_{CH_4}p_{H_2O}^{\ 2} - \frac{p_{H_2}^{\ 4}p_{CO_2}}{K_2}\right)}{(DEN)^2} \tag{5}$$

$$DEN = 1 + K_{CO}p_{CO} + K_{H_2}p_{H_2} + K_{CH_4}p_{CH_4} + K_{H_2O}p_{H_2O}/p_{H_2} \tag{6}$$

where;

K_1: Equilibrium constant of reaction (2).

K_2: Equilibrium constant of reaction (1), bar^2

k_1: Rate coefficient of reaction (1), kmol/(kgcat.h.bar)

k_2: Rate coefficient of reaction (2), kmol. $bar^{1/2}$/(kg cat. h)

p_i: partial pressure of component *i*, bar.

Sabatier reaction is an exothermic reaction whereas RWGS is endothermic reaction. Thus, the methanation

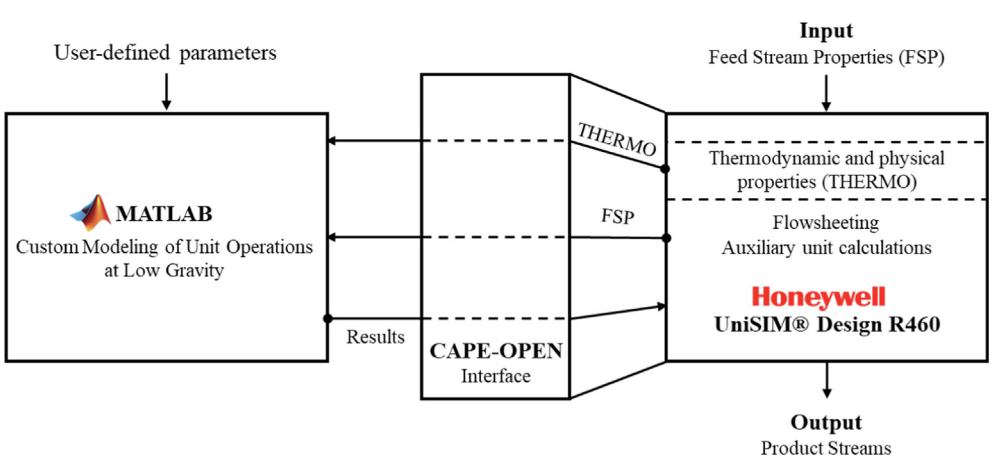

Fig. 2. UniSIM® and MATLAB® integration via CAPE-OPEN extension.

reactor was modelled as adiabatic tubular structured reactor packed with catalytic foam to reduce the pressure drop through the tubes (Cristiani et al., 2012; Fourie and Du Plessis, 2002; Giani et al., 2005; Inayat et al., 2011).

In a module, there is a condenser, C-100 separating intended component as liquid from gas mixture. The condenser was designed as convective condensation inside a tube by using the model validated in microgravity environment by Chow and Parish (1986). In the calculations, enthalpy of vaporization (h_{fg}) was corrected by using Watson's correlation. The average air and ground temperature on Mars typically varies between −30 °C and −63 °C due to seasonal changes (Rover Environmental Monitoring Station, 2017). For our study the average air temperature on Mars was considered as 210 K, as documented by Dr. David R. Williams in the Mars Fact Sheet (NASA Space Science Data Coordinated Archive, 2023). This value was specifically utilized in the calculation of condensers where the condensation tube was exposed to the ambient environment. Temperature fluctuations can impact either the length of the unit or increase of the cooling load on the subsequent coolers. Other units would primarily be affected in terms of insulation thickness. It's important to note that this is a conceptual design demonstrating the feasibility of such production on Mars. Thus, taking into account seasonal or locational changes in further optimization studies would enhance the practical value our conceptual design. Helical two-phase separators, CS-100 and CS-101, were designed to separate liquid and gas phases under lower gravity. For this aim, the model, developed by Kuravi et al. (2004), was used in the design of helical two-phase separator. The main advantage of this helical separator was to overcome lower gravitational acceleration on Mars by achieving 6g of minimum acceleration without requiring power source. In the design, centrifugal tube separator including spiral tube inside with constant diameter was in separation chamber. The outer wall of the tube had number of holes helping to separate heavier liquid from the mixture. The coil was arranged as vertical.

After purifying the products coming out of R-100, the mixture was sent to R-101 for oxidative methane coupling reactions to produce ethylene and the other byproducts. In R-101, methane reacted with oxygen coming from Static Feed Water Electrolysis Module (SFWEM) operating at 93.30 °C and 12.70 atm. The oxidative methane coupling reaction steps on Li/ MgO catalyst, and their reaction rates were given for the temperature range of 710–850 °C as shown below (Stansch et al., 1997; Vatani et al., 2014).

$$\text{step 1}: CH_4 + 2O_2 \rightarrow CO_2 + 2H_2O \tag{7}$$

$$\text{step 2}: 2CH_4 + 0.5O_2 \rightarrow C_2H_6 + H_2O \tag{8}$$

$$\text{step 3}: CH_4 + O_2 \rightarrow CO + H_2O + H_2 \tag{9}$$

$$\text{step 4}: CO + 0.5O_2 \rightarrow CO_2 \tag{10}$$

$$\text{step 5}: C_2H_6 + 0.5O_2 \rightarrow C_2H_4 + H_2O \tag{11}$$

$$\text{step 6}: C_2H_4 + 2O_2 \rightarrow 2CO + 2H_2O \tag{12}$$

$$\text{step 7}: C_2H_6 \rightarrow C_2H_4 + H_2 \tag{13}$$

$$\text{step 8}: C_2H_4 + 2H_2O \rightarrow 2CO + 4H_2 \tag{14}$$

$$\text{step 9}: CO + H_2O \rightarrow CO_2 + H_2 \tag{15}$$

$$\text{step 10}: CO_2 + H_2 \rightarrow CO + H_2 \tag{16}$$

$$\text{step 11}: C_2H_6 + 0.5O_2 \rightarrow 2/3C_3H_6 + H_2O \tag{17}$$

$$\text{step 12}: C_3H_6 + 3O_2 \rightarrow 3CO + 3H_2O \tag{18}$$

$$\text{step 13}: C_3H_6 + 3H_2O \rightarrow 3CO + 6H_2 \tag{19}$$

$$\text{step 14}: C_2H_6 + 1/6O_2 \rightarrow 2/3C_3H_8 + 1/3H_2O \tag{20}$$

$$\text{step 15}: C_3H_8 + 7/2O_2 \rightarrow 3CO + 4H_2O \tag{21}$$

$$\text{step 16}: C_3H_8 + 3H_2O \rightarrow 3CO + 7H_2 \tag{22}$$

$$r_2 = \frac{k_{0,2}e^{-E_{a,2}/RT}\left(K_{0,O_2}e^{-\Delta H_{ad,O_2}/RT}P_{O_2}\right)^{n_2}P_{CH_4}{}^{m_2}}{\left[1 + \left(K_{0,O_2}e^{-\Delta H_{ad,O_2}/RT}P_{O_2}\right)^{n_2} + K_{j,CO_2}e^{-\Delta H_{ad,CO_2}/RT}P_{CO_2}\right]^2} \tag{23}$$

$$r_j = \frac{k_{0,j}e^{-E_{a,j}/RT}P_C{}^{m_j}P_{O_2}{}^{n_j}}{\left(1 + K_{j,CO_2}e^{-\Delta H_{ad,CO_2}/RT}P_{CO_2}\right)^2} \quad j = 1, 3-6, 11, 12, 14, 15 \tag{24}$$

$$r_7 = k_{0,7}e^{-E_{a,7}/RT}P_{C_2H_6}{}^{n_7} \tag{25}$$

$$r_8 = k_{0,8}e^{-E_{a,8}/RT}P_{C_2H_4}{}^{m_8}P_{H_2O}{}^{n_8} \tag{26}$$

$$r_9 = k_{0,9}e^{-E_{a,9}/RT}P_{CO}{}^{m_9}P_{H_2O}{}^{n_9} \tag{27}$$

$$r_{10} = k_{0,10}e^{-E_{a,10}/RT}P_{CO_2}{}^{m_{10}}P_{H_2}{}^{n_{10}} \tag{28}$$

$$r_{13} = k_{0,13}e^{-E_{a,13}/RT}P_{C_3H_8}{}^{m_{13}}P_{H_2O}{}^{n_{13}} \tag{29}$$

$$r_{16} = k_{0,16}e^{-E_{a,16}/RT}P_{C_3H_8}{}^{m_{16}}P_{H_2O}{}^{n_{16}} \tag{30}$$

where;

E_{aj}: Activation energy (kJ/mol)

k_j: Reaction rate constant

K_j: adsorption constant, Pa^{-1}

m_j, n_j: Reaction order.

There were totally 16 reactions tabulated for oxidative coupling of methane over Li/MgO catalyst (Vatani et al., 2014). Among them, 7 reactions were found to be independent using matrix method and these independent reactions were incorporated in reactor modelling. Similar to R-100, Li/MgO catalyst was also packed as foam in the tubes to minimize pressure drop and its effect on the conversion and selectivity.

For both R-100 and R-101, it was assumed that there were no axial and radial dispersions through the reactor and the flow was assumed as fully developed. Peclet number and vessel dispersion number are written as following (Levenspiel, 1999);

$$\text{Peclet Number, } Pe_r = \frac{\text{Convective Flow in axial direction}}{\text{Dispersion flow in axial direction}} = \frac{uL}{D}$$

$$\text{Vessel Dispersion Number} = \frac{D}{uL}$$

where;

D: Dispersion coefficient

u: Superficial velocity

L: Reactor Length

Vessel dispersion number can be modified as following;

$$\text{Vessel Dispersion Number} = \frac{D}{uL} = \frac{D}{ud_t}\left(\frac{d_t}{L}\right)$$

Therefore, Peclet number must approach to infinity while vessel dispersion number must be close to 0 to neglect dispersion effect in the reactor. This means that d_t/L must be low enough to obtain this condition. Particle diameter would be equal to tube diameter because foam type catalysts were used to decrease pressure drop through the reactors. For R-100 and R-101, d_t/L values were calculated as 0.0071 and 0.029, respectively. To confirm the validity of our d_t/L calculations, approximate axial dispersion coefficients for R-100 and R-101 were determined to be 9.55×10^{-2} and 5.03×10^{-3} while Peclet numbers were 227.48 and 31.76, respectively by using the plot given by Wilhelm (1962). Radial dispersion analysis also yielded similar results; thus, validating our d_t/L values and negligible dispersion effects through the reactors.

Single-pass conversion of limiting reactant was calculated by using the following equation;

Reactant Conversion (%) = (The initial amount of reactant-The final amount of reactant)/ (The initial amount of reactant) × 100.

3. Results and discussion

3.1. Martian dust removal (ESP-100)

In Martian atmosphere, the size of suspended particles changes between 0.1 and 6 μm. Silica and iron (III) oxide are the main components constituting Martian dust, and the number of particles per cm^3 of atmosphere was determined as 6 (Perko et al., 2002). Thus, approximately 165.89 kg/s Martian dusts exist in the inlet of 6 kg/h carbon dioxide fed to a module. That's why, it must be collected to prevent units from clogging and volume swelling. To evaluate particle size distribution, a modified gamma function was used (Landis, 1996). Fig. 3 shows the calculated particle size distribution of Martian dust.

It was calculated that 97.45 kg/s Martian dust existed in the size range of 2.4–6 μm while 68.44 kg/s dust was in the range of 0.2–2.4 μm. Screen roll filter and impactor filter could be used to collect Martian dust, its size changing between 2.4 and 6 μm while electrostatic precipitator was used to collect the dust in size between 0.2 and 2.4 μm.

Wire-cylinder electrostatic precipitator was designed to collect dust ranging between 0.2 and 2.4 μm. The operating conditions were set as 1.79 kV and 450 μA by using I-V curves tabulated by Clements et al. (2011). For 0.65 cm radial distance, wire and cylinder radii were determined as 38.23 μm and 6.99 cm, respectively. Active length of wire-cylinder was calculated as 91.44 cm. At the inlet of electrostatic precipitator, the amount of carbon dioxide in the gas mixture was much higher than the other components, therefore, carbon dioxide was used as reference component in ion mobility and other calculations at operating pressure. Electric field was calculated by using these specifications and was found to be 0.37 kV/cm. The average migration velocity of particles was 248.52 m/s. In this design, for all exposure times and particle sizes, diffusion charging was larger than Pauthenier (field) charging, since diffusion charging was dominated for all exposure times and particle sizes when compared to Pauthenier charging. Particle charge via diffusion was calculated by kinetic theory of gases and found as 41.67 pC in 0.01 s for dust particles having maximum 2.4 μm of diameter.

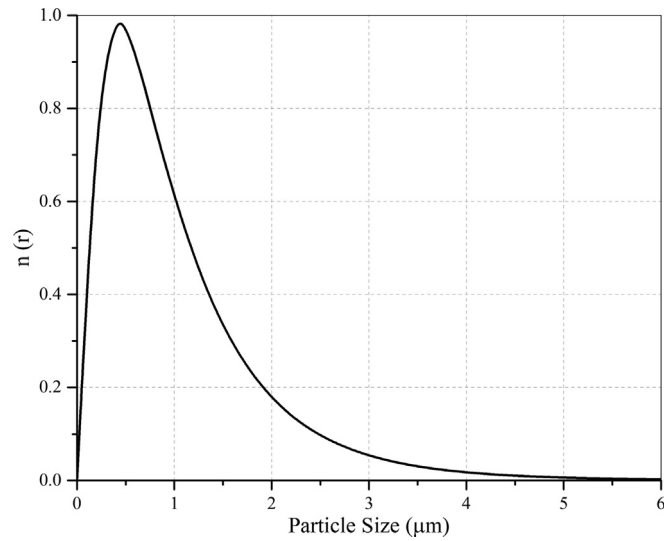

Fig. 3. Particle size distribution of Martian dust.

After collecting entire Martian dust from inlet, the pressure of Martian atmosphere was increased and mixed with Hydrogen coming from Static Feed Water Electrolysis module which produced 2.78 kg/h Oxygen and 0.35 kg/h Hydrogen from 3.13 kg/h water at 93.30 °C and 12.70 atm. Then, the mixture was sent to HEX-101 to increase the temperature suitable for Sabatier reaction. The specifications of inlet stream of R-100 were tabulated in Table 1.

3.2. Methanation reactor (R-100)

After removing dust from Martian atmosphere, carbon dioxide and inert gases were sent to adiabatic structured tubular reactor R-100 to produce methane which was feedstock for ethylene production. For Sabatier reaction, carbon dioxide reacted with hydrogen in the reactor packed with foam type $Ni/MgAl_2O_4$ catalyst. The operating temperature and pressure of R-100 were 400 °C, and 12.56 atm, respectively. At the operating temperature of the reactor, the reactants react over the $Ni/MgAl_2O_4$ catalyst, which kinetically accelerates the reaction. The reactor was packed with foam type catalyst to reduce pressure

Table 1
Inlet specifications of methanation reactor (R-100).

Methanation Reactor Inlet (R-100)	
Temperature (°C)	400
Pressure (atm)	12.56
Mass Flow (kg/h)	6.566
Inlet Molar Compositions	
Methane	0.000000
CO_2	0.430566
CO	0.000361
H_2O	0.000000
H_2	0.548295
O_2	0.000587
Argon	0.007227
Nitrogen	0.012195
NO	0.000768
Martian Dust	0.000000

drop. In fact, pressure drop through the tubes was calculated so small that outlet pressure was very close to 12.56 atm. Thus, the pressure drop through the reactor was negligible. The tube number in the reactor was set to 4000 with each tube having 10 mm of tube diameter. The length of the reactor was calculated to be 140 cm. The overall reaction exhibited exothermic behavior, so the outlet temperature was found 419.8 °C. At the end of the reaction, single-pass conversion based on carbon dioxide was calculated to be 32%. Methane production capacity of R-100 was 92.48 tons/year using 100 modules. The outlet specifications of methanation reactor were given in Table 2.

3.3. Condenser (C-100)

In a module, there was a condenser called C-100 separating liquid from gas mixture. Since the outside temperature on Mars is 210 K, the surface of the tubes would be open to the outside: thus, not requiring additional cooling medium or electrical cooling system. The condenser in the module was designed as convective condensation inside a tube, and the flow type in the tube was assumed to be annular. Some modifications were applied to the model to solve all equations simultaneously. The roots of nondimensional shear stress, M, were initially found and then finally, Re_L, Re_V, u_V, u_L, and M were evaluated as a function of z.

C-100 was designed to remove water from gas mixture coming from R-100. Water was condensed in order to use in SFWEM to produce hydrogen and oxygen. The temperature of condensed water from C-100 was found to be −30.15 °C. Therefore, it was sent to HEX-101 economizer to increase its temperature to 93.30 °C which was operating temperature of SFWEM. Mass of condensate was 1.43 kg/h so roughly 1.7 kg/h water make-up for SFWEM was necessary to produce desired hydrogen amount. Meanwhile, 0.55 kg/h of water was produced in the solid oxide fuel cell. The temperature of water make-up was increased from 25.10 °C to 93.30 °C in HEX-101, HEX-102 and HEX-104. The diameter and length of the condenser were calculated to be 0.46 cm and 83.8 cm, respectively. Also, film thickness inside the tube was calculated to be 0.00493 cm.

Table 2
Outlet specifications of methanation reactor (R-100).

Methanation Reactor Outlet (R-100)	
Temperature (°C)	419.8
Pressure (atm)	12.56
Mass Flow (kg/h)	6.566
Outlet Molar Compositions	
Methane	0.145708
CO_2	0.378209
CO	0.032590
H_2O	0.323539
H_2	0.093122
O_2	0.000758
Argon	0.009333
Nitrogen	0.015749
NO	0.000992
Martian Dust	0.000000

3.4. Two-phase separator (CS-100, CS-101)

This special apparatus was designed to separate two-phase fluids under lower gravity by Kuravi et al. (2004). In this study, helical two-phase separators were designed to remove carbon dioxide and hydrogen from the products of R-100 at cryogenic temperature under lower gravity conditions. CS-100 was used to separate carbon dioxide at −131.4 °C and 12.29 atm while CS-101 was used for separation of hydrogen at −200 °C and 9.73 atm. Table 3 represents the specifications of CS-100 and CS-101.

In the design of centrifugal two-phase separator, minimum 6g of acceleration was desired to separate carbon dioxide as liquid phase and hydrogen as gas phase. Vertical alignment was preferred because in this alignment low superficial velocities occurred in annular regime in which liquid droplets began to move through the holes as compared to horizontal alignment.

The diameter of coil must be chosen in a way that intended acceleration of 6 g could be achieved. Kuravi et al. (2004) gave the relationship between the centrifugal acceleration and different average velocities of two-phase mixtures at different coil radii. Therefore, coil diameter must be selected in a care to prevent exit liquid phase from

Table 3
The specifications of CS-100 and CS-101.

Specification	CS-100	CS-101
Length of the tube (m)	1.402	0.507
Diameter of the tube (m)	0.01	0.006
Length of the coil (m)	0.134	0.054
Diameter of the coil (m)	0.0041	0.0018
Diameter of the holes (m)	0.0002	0.0002
Hole span (m)	0.0005	0.0002
Number of holes	2803	1268
Number of helical	11	10

re-entering to holes. Superficial velocities of gas phases at the inlet of CS-100 and CS-101 were 0.20 m/s and 0.13 m/s, respectively. Therefore, the selected coil radii were adequate to reach 6g of acceleration for calculated average velocities. Also, transition from one pattern to another could occur if coil diameter were small enough with low superficial velocities, and centrifugal force was more dominant than gravitational force for small coil diameter.

Hydrogen was separated as gas phase with 97.62% purity. It was initially expanded to 1.48 atm and then, sent to HEX-103, and HEX-102 economizers in order, to make its temperature 155.1 °C for solid oxide fuel cell to produce electricity at 1.20 atm. Also, after optimization, some portion of hydrogen could be used further as reactant in high-density polyethylene production.

3.5. Ethylene production reactor (R-101)

After separation of water, carbon dioxide and hydrogen from R-100 outlet, methane was sent to R-101 for oxidative coupling reactions with oxygen. The operating temperature and pressure of R-101 were 850 °C and 9.59 atm, respectively. The temperature of methane and oxygen coming from SFWEM were increased to 850 °C via HEX-104 economizer. R-101 was adiabatic tubular structured reactor with 1000 tubes each being 4 cm in diameter and 140 cm in length and tubes were packed with foam type Li/MgO to eliminate pressure drop through the tubes. At the end of the reaction, temperature and pressure did not change substantially. The specifications of R-101 are given in Table 4.

Ethylene would be used as feedstock to produce high-density polyethylene which is 3-D printing material, in the presence of typical Phillips or Ziegler-Natta catalyst. The typical operating temperature and pressure range of the catalysts were known to be between 343 and 383 K and 9.87–29.61 atm, respectively (McDaniel, 2010). Therefore, the outlet of R-101 was initially compressed to 12.56 atm and then, sent to HEX-104 economizer to increase its temperature to 110 °C which is suitable for HDPE production in the presence of such polyethene catalysts.

Table 4
The specifications of ethylene production reactor (R-101).

Ethylene Production Reactor (R-101)	
Temperature (°C)	850
Pressure (atm)	9.59
Mass Flow (kg/h)	0.3682
Outlet Molar Compositions	
Methane	0.192140
CO_2	0.244805
CO	0.000435
H_2O	0.055004
H_2	0.321174
O_2	0.056546
Ethylene	0.045639
Ethane	0.006301
Argon	0.027307
Nitrogen	0.049503
NO	0.001148
Martian Dust	0.000000

Before feeding methane into R-101, it was fractionated and 25% of it was fed to R-101. Other portion of methane was initially sent to HEX-102 economizer and K-101 for its temperature to be −17.56 °C and 54.28 atm. Then, it was sent to HEX-104 to adjust its temperature suitable for liquid storage. A total of 288.192 tons/year methane using 100 modules could be stored as liquid propellant at −97 °C and 54.14 atm.

SFWEM could produce 2.78 kg/h oxygen to meet desired hydrogen amount so there was 2.63 kg/h excess oxygen which could be used in life support systems. To make its conditions suitable for life support systems, excess oxygen was sent to HEX-104 economizer to increase its temperature from 93.3 °C to 206.9 °C and then, expanded from 12.56 atm to 1 atm. Thus, a total of 2.63 kg/h oxygen at 25 °C and 1 atm which could be used for life support systems of Mars habitats, rockets, or space station.

Within these main unit operations, total ethylene production capacity was found 17.71 tons/year using 100 modules from Martian atmosphere feed containing 6 kg/h carbon dioxide for each module. As mentioned, mini ethylene production plant from Martian atmosphere was designed as scale-out architecture so this production capacity can be increased by adding modules in series.

For one module, net power requirement was calculated to be 4.47 kW, 76.50% of which was covered by Static Feed Electrolysis Module and remaining was for electrostatic precipitator, micro compressors, and heaters. High Power Density Solid Oxide Fuel Cell, developed by NASA, could be used to supply 2.53% of power requirement of a module by using unreacted hydrogen amount (Cable et al., 2014; Cable and Sofie, 2009; Cable and Sofie, 2014).

The reactor (R-100) had dimensions of 140 cm in length and 31.6 cm in diameter, with an anticipated cost of $130,981 for the stainless-steel construction. The condenser (C-100), on the other hand, had dimensions of 83.8 cm in length and 0.5 cm in diameter, with an estimated cost of $86,100 for the titanium-based construction. This study did not consider the unsteady-state behavior because the module operated at steady-state, so the start-up operation of the module was not considered in the study.

4. Conclusion

Honeywell UniSIM® Design R460 was used to simulate preliminary design of self-sustaining mini ethylene production plant from Martian atmosphere. It was integrated with MATLAB® via cape open extension, and the main units were modelled under lower gravity. In principle, the system contains integrated methane and ethylene production and gas purification units embedded in a module to produce 17.71 tons ethylene per year using 100 modules. Beside of

the ethylene production, the module provided additional oxygen, liquid propellant, and water for electrolysis. Also, unreacted hydrogen could be used in solid oxide fuel cell to produce electricity. The module could easily be adapted for possible feedstock to produce other chemicals under such a low gravity.

Declaration of Competing Interest

The authors declare that they have no known competing financial interests or personal relationships that could have appeared to influence the work reported in this paper.

Acknowledgement

This research did not receive any specific grant from funding agencies in the public, commercial, or not-for-profit sectors.

References

Akata, B., Yilmaz, B., Jirapongphan, S.S., Warzywoda, J., Sacco, A., 2004. Characterization of zeolite Beta grown in microgravity. Microporous Mesoporous Mater 71, 1–9. https://doi.org/10.1016/j.micromeso.2004.03.012.

Cable, T. L., Sofie, S. W., 2009. Symmetrical, bi-electrode supported solid oxide fuel cell. US 7,534,519 B2.

Cable, T. L., Sofie, S. W., 2014. Method for making a fuel cell from a solid oxide monolithic framework. US 8,697,313 B2.

Cable, T. L., Setlock, J. A., Farmer, S. C., 2014. Method for making a fuel cell. US 8,715,886 B1.

Choi, J., Cho, H., Yun, S., Jang, M.G., Oh, S.Y., Binns, M., Kim, J.K., 2019. Process design and optimization of MEA-based CO_2 capture processes for non-power industries. Energy 185, 971–980. https://doi.org/10.1016/j.energy.2019.07.092.

Chow, L., Parish, R., 1986. Condensation heat transfer in a microgravity environment, 1986. 24th Aerospace Sciences Meeting.

Clements, J.S., Johansen, M.R., Lowder, M.L., Thompson, S.M., Williams, B.S., Calle, C.I., Cox, N.D., Hogue, M.D., 2011. Development of an electrostatic precipitator to remove Martian atmospheric dust from isru gas intakes during planetary exploration missions, 2011. IEEE Industry Applications Society Annual Meeting.

Cristiani, C., Finocchio, E., Latorrata, S., Visconti, C.G., Bianchi, E., Tronconi, E., Groppi, G., Pollesel, P., 2012. Activation of metallic open-cell foams via washcoat deposition of ni/mgal2o4 catalysts for steam reforming reaction. Catal. Today 197, 256–264. https://doi.org/10.1016/j.cattod.2012.09.003.

Cuoci, A., Mehl, M., Ferraris, G.B., Faravelli, T., Manca, D., Ranzi, E., 2005. Autoignition and burning rates of fuel droplets under microgravity. Combust. Flame 143, 211–226. https://doi.org/10.1016/j.combustflame.2005.06.003.

Flynn, M., Rosenberg, S.D., 2005. In situ production of high density polyethylene and other useful materials on Mars. SAE Tech. Pap. https://doi.org/10.4271/2005-01-2776.

Fourie, G.J.P., Du Plessis, J., 2002. Pressure drop modelling in cellular metallic foams. Chem. Eng. Sci. 57, 2781–2789. https://doi.org/10.1016/S0009-2509(02)00166-5.

Giani, L., Groppi, G., Tronconi, E., 2005. Mass-transfer characterization of metallic foams as supports for structured catalysts. Ind. Eng. Chem. Res. 44, 4993–5002. https://doi.org/10.1021/ie0490886.

Hintze, P.E., Meier, A.J., Shah, M.G., DeVor, R., 2018. Sabatier system design study for a mars isru propellant production plant, New Mexico, 2018. 48th International Conference on Environmental System.

Inayat, A., Freund, H., Zeiser, T., Schwieger, W., 2011. Determining the specific surface area of ceramic foams: The tetrakaidecahedra model revisited. Chem. Eng. Sci. 66, 1179–1188. https://doi.org/10.1016/j.ces.2010.12.031.

Karimi, M., Hillestad, M., Svendsen, H.F., 2011. Investigation of intercooling effect in CO_2 capture energy consumption. Energy Procedia 4, 1601–1607. https://doi.org/10.1016/j.egypro.2011.02.030.

Karl, D., Cannon, K.M., Gurlo, A., 2022. Review of space resources processing for Mars missions: Martian simulants, regolith bonding concepts and additive manufacturing. Open Ceramics 9 100216. https://doi.org/10.1016/j.oceram.2021.100216.

Kuravi, S., Glassman, B., Lin, Y.-r., Du, J., Zhao, G., Chow, L., Rini, D., 2004. Design of a two-phase separator for variable gravity applications.

Landis, G.A., 1996. Dust obscuration of mars solar arrays. Acta Astronaut. 38, 885–891. https://doi.org/10.1016/S0094-5765(96)00088-4.

Levenspiel, O., 1999. Chemical Reaction Engineering, third ed. Wiley, United States of America.

McDaniel, M.P., 2010. Chapter 3 - a review of the phillips supported chromium catalyst and its commercial use for ethylene polymerization. In: Gates, B.C., Knözinger, H. (Eds.), Advances in Catalysis. Academic Press, United States of America, pp. 123–606.

Motil, B.J., Rame, E., Salgi, P., Taghavi, M., Balakotaiah, V., 2021. Gas-liquid flows through porous media in microgravity: the International Space Station Packed Bed Reactor Experiment. AIChE J. 67 e17031.

NASA Space Science Data Coordinated Archive, 2023. Mars Fact Sheet. https://nssdc.gsfc.nasa.gov/planetary/factsheet/marsfact.html (accessed 5 November 2023)

Naser, M.Z., 2019. Space-native construction materials for earth-independent and sustainable infrastructure. Acta Astronaut. 155, 264–273. https://doi.org/10.1016/j.actaastro.2018.12.014.

Naser, M.Z., Chehab, A.I., 2018. Materials and design concepts for space-resilient structures. Prog. Aerosp. Sci. 98, 74–90. https://doi.org/10.1016/j.paerosci.2018.03.004.

Parliament.uk. 2017. Space sector report. https://www.parliament.uk/documents/commons-committees/Exiting-the-European-Union/17-19/Sectoral%20Analyses/34-Space-Report.pdf (accessed 19 December 2019).

Peng, D.-Y., Robinson, D.B., 1976. A new two-constant equation of state. Ind. Eng. Chem. Fundam. 15, 59–64. https://doi.org/10.1021/i160057a011.

Perko, H., Nelson, J., Green, J., 2002. Review of Martian dust compotisition, transport, deposition, adhesion, and removal. Space Robot.

Perry, J., Agui, J., 2017. Life support filtration system trade study for deep space missions.

Powell, J., Schubert, H., Jensen, F., 1974. Static feed water electrolysis module.

Rover Environmental Monitoring Station, 2017. Weather report Mars Year 33, month 11. http://cab.inta-csic.es/rems/en/ (accessed 5 November 2023)

Sen, S., Carranza, S., Pillay, S., 2010. Multifunctional Martian habitat composite material synthesized from in situ resources. Adv. Space Res. 46 (5), 582–592. https://doi.org/10.1016/j.asr.2010.04.009.

Sofonea, V., 1996. Two-phase fluid subjected to terrestrial or space conditions: a lattice Boltzmann study. Int. J. Mod. Phys. C 7, 695–704.

Space Station Research Explorer. Flow Chemistry Platform for Synthetic Reactions on ISS. https://www.nasa.gov/mission_pages/station/research/experiments/explorer/Investigation.html?#id=8172 (accessed 8 May 2022).

Stansch, Z., Mleczko, L., Baerns, M., 1997. Comprehensive kinetics of oxidative coupling of methane over the la2o3/cao catalyst. Ind. Eng. Chem. Res. 36, 2568–2579. https://doi.org/10.1021/ie960562k.

Toon, O.B., Pollack, J., Sagan, C., 1977. Physical properties of the particles composing the Martian dust storm of 1971–1972. Icarus 30, 663–696. https://doi.org/10.1016/0019-1035(77)90088-4.

Troemner, M., Ramyar, E., Meehan, J., Johnson, B., Goudarzi, N., Cusatis, G., 2022. A 3D-Printing Centered Approach to Mars Habitat Architecture and Fabrication. J. Aerosp. Eng. 35 (1). https://doi.org/10.1061/(ASCE)AS.1943-5525.0001359.

Vatani, A., Jabbari, E., Askarieh, M., Torangi, M.A., 2014. Kinetic modeling of oxidative coupling of methane over li/mgo catalyst by genetic algorithm. J. Nat. Gas Sci. Eng. 20, 347–356. https://doi.org/10.1016/j.jngse.2014.07.005.

Wilhelm, R. H., 1962. Progress towards the a priori design of chemical reactors. In: Pure and Applied Chemistry, pp. 403.

Xu, J., Froment, G.F., 1989. Methane steam reforming, methanation and water-gas shift: I. Intrinsic Kinetics. AIChE J. 35, 88–96. https://doi.org/10.1002/aic.690350109.

Yan, Y., Pan, S., Jules, K., Saghir, M.Z., 2007. Vibrational effect on thermal diffusion under different microgravity environments. Bremen Microgravity Sci. Technol. XIX-2, 12–25. https://doi.org/10.1007/BF02911863.