3D Printing of Tubular Connectors for Space Frame Structures

Ashok Kumar Perka[1](✉), Bijoy Rajak[1], and Shibashis Ghosh[2]

[1] Materials Welding and Joining Research Group, R&D, Tata Steel, Jamshedpur 831001, India
ashok.p@tatasteel.com
[2] Design & Manufacturing, Altair, Pune 411001, India

Abstract. In the construction industry, wire-based steel 3D printing (WBS-3DP) technology for structural parts has yet to be explored. As 3D printing becomes highly productive and cost-effective with the development of qualification standards, it opens a wide range of opportunities for the steel-based additive construction segment too. The major advantage of large-scale 3D printing techniques like wire-arc additive manufacturing (WAAM) is the ability to develop components that are more compatible through topology optimization and with the mechanical requirements of the structural standards. This research aims to discuss the application of WAAM in the fabrication of space frame structures for T-K-Y joints with structural integrity. In this study, a space frame structure was designed and developed with multi-branch tube connectors using WBS-3DP technology. These tube connectors are used to accommodate any number of steel tubes at arbitrary angles, such that the resulting T-K-Y joints are smooth and lightweight. The prototype space frame structure with a multi-branch tube connector is designed to demonstrate how the WAAM process can produce more efficient structures by eliminating challenges involved in tube joining and welding. Mainly there are three major challenges in the 3D printing of the tube connectors, such as transforming T-K-Y joints into a topology-optimized tube connector design; developing a tool path for the tube connector model, and printing the model by overcoming the issue of heat management. This paper also aims to bridge the gap between WBS-3DP and its application in the construction industry. It was concluded that WBS-3DP has the potential to revolutionize the construction industry by producing innovative parts such as tube connectors with ease of fabrication and improved digital construction techniques.

Keywords: WAAM · Tube connectors · T-K-Y joints · WBS-3DP

1 Introduction

Additive Manufacturing (AM), also known as 3D printing, is a layer-based fabrication process that involves depositing thin layers of material together based on a 3D computer model to generate a physical model. Manufacturing industries such as aerospace, automotive, power and energy have a strong interest in realising metal 3D printing's full potential, whereas steel 3D printing in the construction industry appears to be moving at

© The Author(s), under exclusive license to Springer Nature Switzerland AG 2024
M. J. Tan et al. (Eds.): 3DcP 2023, STAM, pp. 251–262, 2024.
https://doi.org/10.1007/978-3-031-64269-2_31

a much slower pace for a number of reasons, such as the size of the parts to be printed, high load capacity requirements and service life of the structures etc., (Anis et al. 2019; Laghi et al. 2019).

Steel tubes are frequently used in the construction industry for several applications such as trusses, frames, space frames etc., (Hassani et al. 2019). Some of the most challenging structural steel welding and inspection problems are encountered during the construction of round tubular members, especially at the T, K, and Y end connections. The conventional way of TKY connections fabrication requires several steps such as, profile cutting of the tubes followed by the edge preparation and joint fit-up assembly for welding as shown in Fig. 1 (Kühne et al. 2019). Also, there are many specific items that should be taken into consideration when planning for structural tubular fabrication. Even more so than for other types of structural fabrication at all phases such as welding qualification, dimensional control, and non-destructive testing, etc. The disadvantages of directly welding tubular joints include stress concentration in the welding pass, high residual stress in the members, design requirements in the fabrication and assembly process, and great difficulties of fabrication when the braces overlap each other. Also, in TKY joints, the importance of complete joint penetration groove welds, eliminating "notch effects" at the root and notably the cap of node welds, and achieving the requisite weld profile have all received increased emphasis. It may be necessary to grind welds that are crucial for fatigue endurance to a smooth curve. Brittle failure is less likely because of this approach. However, it also means that fabrication and quality assurance/quality control requirements are becoming more advanced and severe.

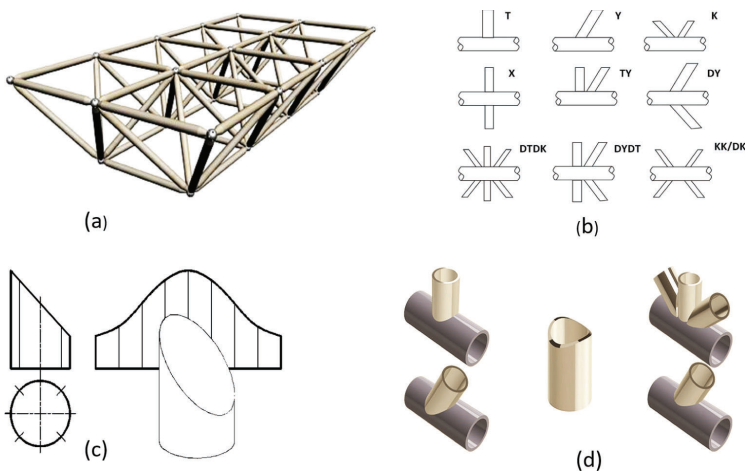

Fig. 1. Tubular joints fabrication process (a) Space frame design (b) Identify type of T-K-Y joints (c) Profile cutting (d) Welding and assembly of joints

The typical welding procedure for TKY joints welding as per the global standards is shown in Fig. 2 (Chen et al. 2019). The tubulars will connect each other at an angle ranging from 30° to 90°. The interface between these profiles is divided into three parts: crown, heel, and saddle. These profiles are only welded using manual welding methods and require a different skill set to do welding in each of these zones. These directional tubes are capable of transferring forces in various directions, which makes them ideal

for interconnecting tabular joints in high-rise building applications. Hence, the load-carrying capacity of the connection completely depends on the quality of the welding along the profile (Shao 2007).

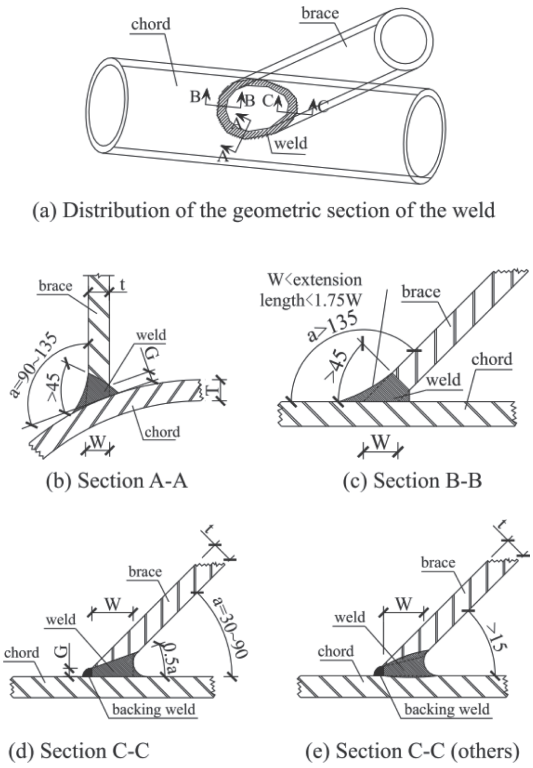

Fig. 2. Geometric simulation on the weld of the T K Y joint (Chen et al. 2019)

Alternatively, the TKY joints were proposed to be manufactured using several methods using customized designs to simplify the challenges involved with conventional welding methods. Custom-designed tube connectors have major benefits such as lower weight, and faster construction by reducing the lead time and also the cost of the component while ensuring structural performance. (Wang et al. 2020). However, such tubular connection designs were observed to have geometrical complexities, and curvature patterns that were highly challenging to build using conventional fabrication methods such as milling or casting or subtractive manufacturing. The higher carbon content of cast steel also possesses weldability issues and thickness defects compared to conventional hot-rolled steel products. (Herion et al. 2010; Wang et al. 2013). On the other hand, 3D printing will help in resolving such challenges in manufacturing complex shapes with better process control. This approach will also solve the skilled personnel shortage that the steel construction industry is now experiencing.

Based on a comparative analysis of the benefits and drawbacks of directly welded tubes, this research proposes a new method for fabricating tubular joints using wire-based steel 3D printing (WBS-3DP). The major objective of this research is to study the feasibility of joining steel tubes using 3D-printed connectors. The innovative welding tubular junction will attract greater interest and further investigation due to its simple fabrication approach, precise dimensioning, and ideal mechanical qualities. This research

will be beneficial in the field of digital construction. The basic knowledge needed for structural optimisation with the 3D printing method and the material characterisation has been summarised with the various steps involved in the printing of tube connectors.

2 Materials and Methods

2.1 Prototype for Tubular Joints Design

A prototype spaceframe structure model was designed as shown in Fig. 3, in such a way that the designed model can accommodate all possible types of T-K and Y-type tube connections. The design consists of 3 truss structures and 2 side frame structures using various diameters and thicknesses of tubes. The lower part of the structure was designed using tubes of a diameter of 114 mm and thickness of 5.4 mm, as it takes a major part of the structural load; and upper part of the structure was designed using a diameter of 76 mm and thickness of 4.5 mm as which takes the roof sheet load.

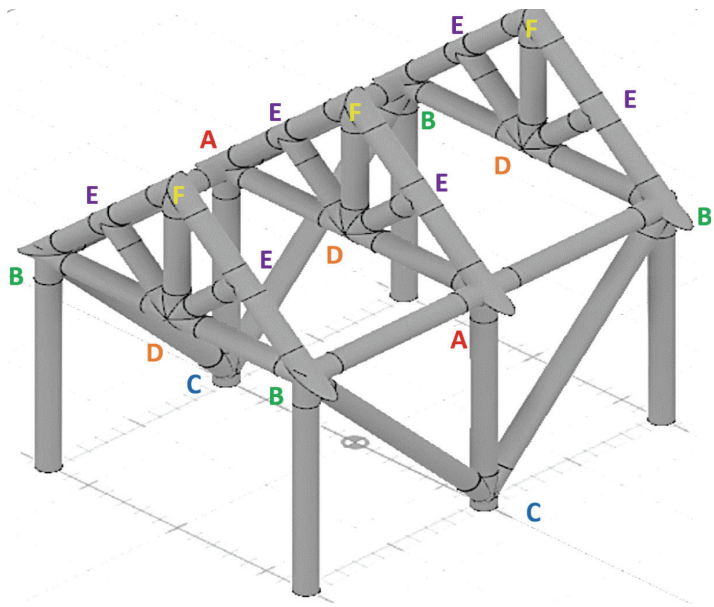

Fig. 3. Designed tubular structure model with six types of connections namely A, B, C, D, E & F.

In this work, a topology optimisation tool from Altair Inspire Print3D was used for the nodes/tube connectors in order to reduce the material usage and print time. Figure 4 shows the topology optimisation process on how the material was reduced from the entire components of tube connections based on the structural load distribution, and further surfaces were smoothened to avoid irregularities in the final design. Excess overhangs and inclinations were also avoided while optimising the final design.

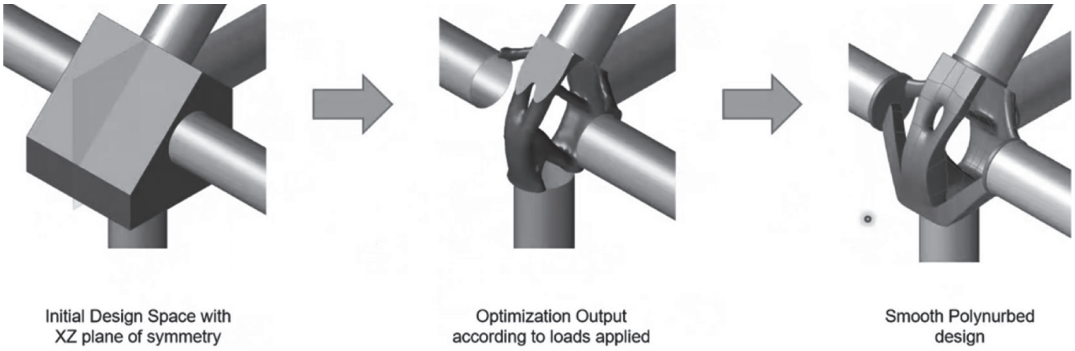

Fig. 4. Topology optimisation process using Altair Inspire Print 3D

2.2 Tubular Joining Using Additive Manufacturing

The printing of the TKY connectors was conducted at the Centre for Advanced Welding and Joining (CAWJ), R & D, Tata Steel, India. The facility has a robotic wire arc additive manufacturing (WAAM), in which the metal 3D printing process is carried out using integrated 3D printing equipment consisting of Metal Inert Gas (MIG) welding which is connected to a 6-axis robotic arm.

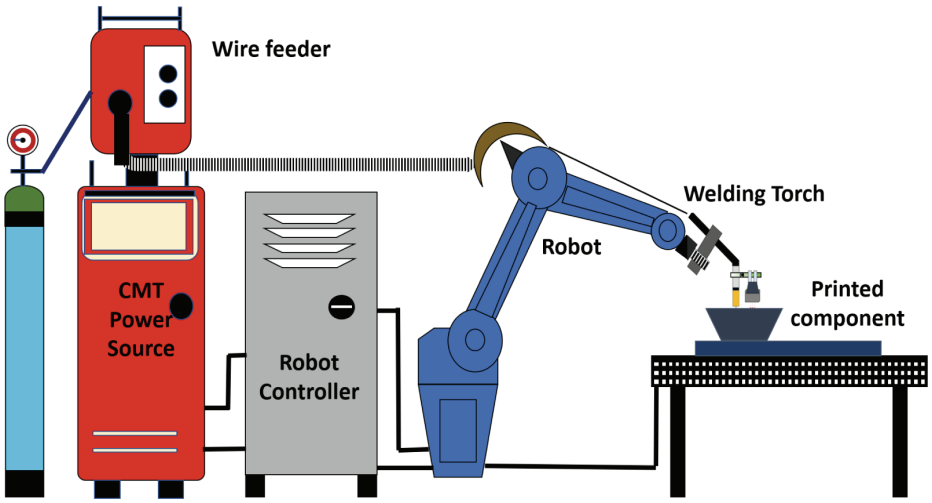

Fig. 5. Integrated WAAM system with a welding power source, 6-axis robot, and data acquisition system.

The WBS-3DP technique, in combination with localization and path-planning strategies, allows for local control of detail geometry, allowing for the manufacture of tailored welded connections that correct for material and construction tolerances. Figure 5 shows the schematic representation of the integrated WAAM system, including a power source, 6-axis robot, fixed table and base plate arrangement in a cooling tank and data acquisition set-up.

2.3 Printing Process

The 3D CAD model is sliced into layers in order to print the topology-optimised components. Robot tool paths were generated using the Autodesk - PowerMill software. In this study, a carbon steel wire of diameter 0.8 mm was used as feedstock. The shielding gas was 82% Ar with an 18% Co2 mixture at a constant flow rate of 15 l/min. By using these parameters, a bead height of 2 mm and a width of 6 mm were planned to be maintained, with a constant bead over of 1.5 mm. The temperature between the passes (interpass temperature) was kept below 120 °C and controlled using temperature sensors (Table 1).

Table 1. Properties of the filler wires used

Wire type	Dia. (mm)	C	Si	Mn	Cr	Mo	Ni	Ys (MPa)	UTS (MPa)	%El
Low carbon steel	0.8	0.07	0.83	1.48	--	--	--	>470	>565	>22

To validate the process parameters, an additive manufacturing procedure specification (AMPS) was also performed using identical process parameters. A steel block of size 400 × 400 × 50 mm was deposited under similar conditions used for the TKY joint printing. Further, mechanical characterization was carried out on the printed samples.

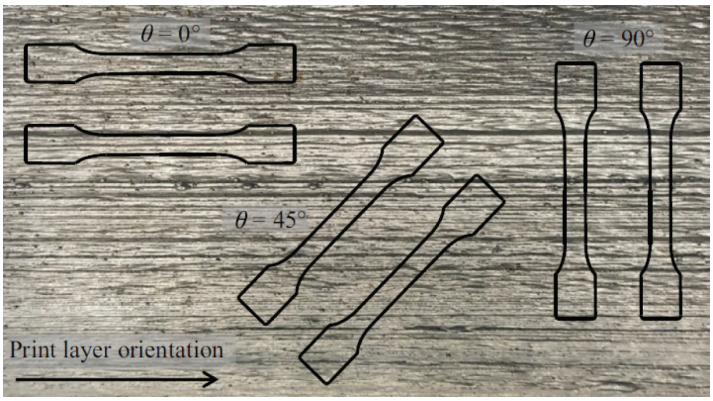

Fig. 6. Tensile test sample location from the test specimen

The tension test specimens were prepared along the horizontal plane condition, vertical plane condition, and angular plane conditions in accordance with standard or sub-size specimen dimensions as given in ASTM E8/E8M as shown in Fig. 6.

2.4 Metallurgical and Mechanical Characterization

The additively manufactured samples were characterized to study the microstructure that was formed as a result of layer-by-layer printing. The mounted and polished samples were etched using 2% nitric acid in ethanolic solution to reveal the phases. Leica optical microscope was used to study the microstructure, and grain size that were formed. Ziess Oxford made SEM-Electron back scattered diffraction (EBSD) study was done along the build direction and the print direction using a step size of 1.5 μm to understand the crystallography of the solidified grains. Oxford-hkl software was used to analyse the inverse pole figures and the texture. Instron universal tensile testing machine was used to evaluate the tensile properties using a cross-head velocity of 5 mm/min along different directions to understand the anisotropy of the built component.

3 Results and Discussion

After topology optimisation, the dimensions and weight along with layers and slices of each connection are shown in Table 2.

Table 2. Details of the T-K-Y connections after topology optimisation.

Connection	Quantity	Part boundary dimensions (mm)	Weight (kg)
A	2	240 × 284 × 340	42
B	4	257 × 227 × 338	42
C	2	200 × 344 × 304	32
D	3	327 × 200 × 224	26
E	6	150 × 150 × 201	10
F	3	305 × 120 × 100	5.5

The details of each topology-optimised connection are shown in Fig. 7. The final dimensions of all the tubular connectors were found within the required size limits with a rough surface finish. The deposition of nodes in this work was done in a zig-zag pattern. Maintaining a constant layer height is one of the most difficult aspects of following a zig-zag tool path pattern. To remedy this issue, a hybrid tool path approach was presented, which combines the benefits of a zig-zag tool path with the solution of the non-uniform layer height problem. By overlapping the edges of the zig-zag pattern, an additional boundary layer was created. The boundary layer was then added with a 0.5 mm overlap. During the printing process, the fundamental process parameters are (i) the current and its voltage, (ii) the wire diameter, (iii) the wire-feed rate, (iv) the welding speed and (v) the vertical printed layer height. Therefore, it becomes crucial to properly characterize WAAM metal parts related to the specific process parameters, in terms of geometrical accuracy and mechanical response.

The control of the printing parameters is possible directly from the program by specifying the welding lists containing information on wire feed speed, travel speed, gas

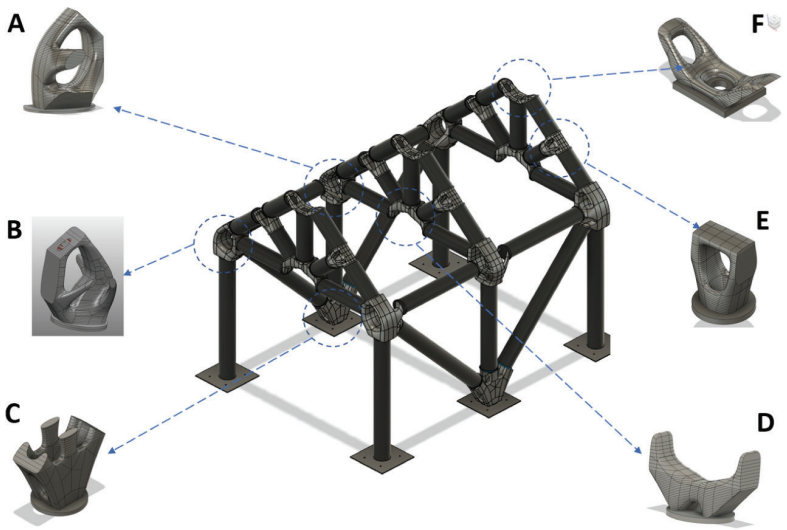

Fig. 7. TKY Connection in the designed tubular structure after topology optimization

pre-flow, etc. Figure 8 shows the sample data of current, and voltage captured during the printing process.

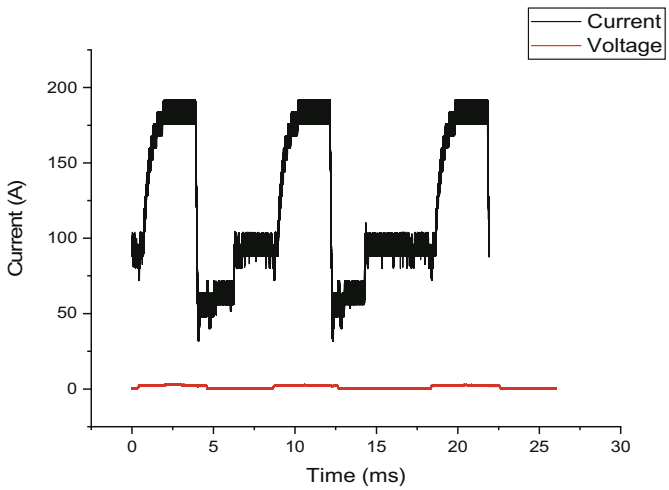

Fig. 8. I-V data captured at a frequency of 12.5MHz.

All six types of TKY connectors were printed using the same WAAM procedure. The final produced parts are shown in Fig. 9. As per the proposed space frame design, it was required to build 3 number of connections for F- connector, and after following the above procedure repeatedly it was observed that the weights of the three F-connectors were observed as 6.95 kg, 6.97kg and 6.93 kg. So, it clearly shows that the repeatability of the WAAM procedure was almost 99%.

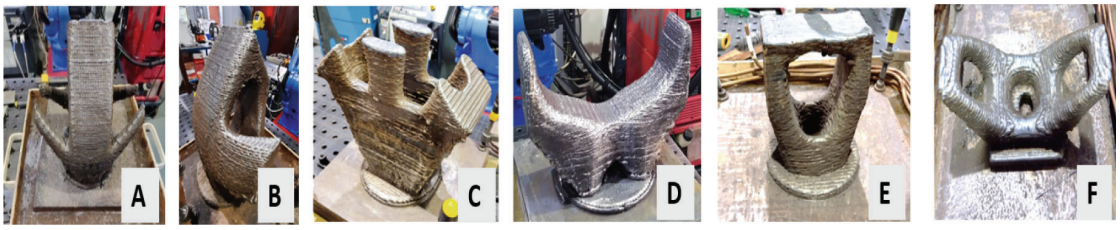

Fig. 9. Printed TKY joints after topology optimisation

An attempt was made to validate the printing procedure through test coupon printing, and the tensile test results in 0-degree, 45-degree and 90 degrees are shown in Fig. 10.

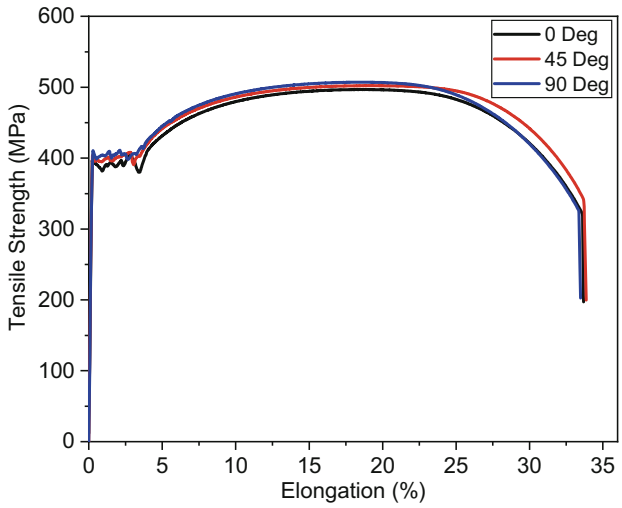

Fig. 10. Tensile properties of the test coupon

The tensile test results clearly show that there were no significant differences found with respect to the direction in which the tensile properties were observed. The tensile properties were observed isotropic in nature, in line with the wire properties with yield strength between 395-405MPa, tensile strength range between 497-507MPa, and elongation range between 32–40%.

The microstructure and EBSD results are shown in Fig. 11. The microstructure of printed samples showed an equiaxed ferrite matrix with 7–10% pearlite as the second phase. Each printed layer showed two distinct grain sizes. The higher grain size on top of the layer is due to the reheating of the deposited layer and its grain growth. Large-area EBSD scans were done along the print direction and the build direction. It can be observed from the crystallography analysis that there is no directional solidification along the build or the print direction. The formation of solidification texture was avoided using the print layer rotation strategy (90^0 rotation between individual layers).

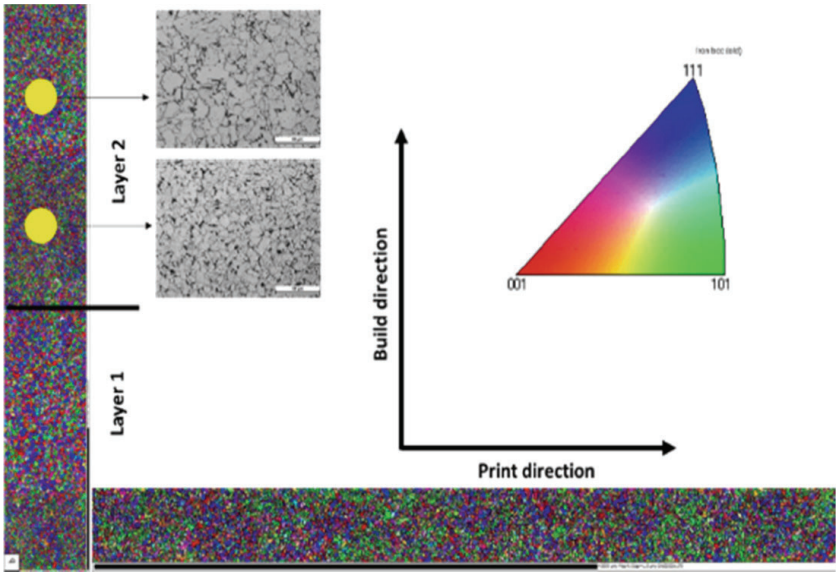

Fig. 11. Microstructure and EBSD analysis

The developed 3D-printed connectors are fixed at the designated multi-branch connection location using an interface plate between the connector and the tube section. Figure 10 shows the final structure installed at the Centre for Advanced Welding and Joining (CAWJ) research laboratory, R&D, Tata Steel in India. As the locations of joints are accurate, it is necessary to control the straightness of the tubular sections so that the final structure can get accurate overall dimensions. Also, in this approach, there is no need to groove weld these complex profiles, a circular fillet weld can make the complete connection between the printed connector and the tube using an interface plate (Fig. 12).

Fig. 12. The installed tubular structure manufactured through the WBS-3DP technique.

This approach reduces the welding difficulty level from 6GR to 6F or 5F position, so the quality of the welding pass can be better assured. Hence, it can be concluded that the developed technique also solves the skilled personnel shortage that the steel

construction industry is now experiencing. Many construction industries are investing effort into transforming 6GR welds into an automated manufacturing process since creating qualified welders with 6GR qualifications involves a lot of effort in terms of training cost and time. The cost of connection printing in this process is mostly comprised of feedstock or wire costs, as well as the capital cost of an integrated WAAM system, which might be nearly 1.5 to 2 times the cost of typical steel products such as tubes or beams (Shah et al. 2023). Considering the printed connectors as an integral part of raw materials for the tube construction, 4 times less effort is required if the 6GR joints are converted to 5F joints using the WAAM process.

4 Conclusions

This research proposes a method comprised of a digital setup using a welding-based integrated WAAM system that structures the detailing, processing, and production of tubular connections. In this study, a space frame structure was designed and developed with multi-branch tube connectors using WBS-3DP technology. To prove the feasibility of the idea, six types of TKY connectors were identified from the developed spaceframe design, and 20 connectors were successfully printed using the WAAM method. The result shows that the printed connectors can be installed in place of the TKY connection with better tolerances. The test coupon results also confirmed that the mechanical properties of the printed material have achieved the desired tensile strength level, matching those of conventional tubular steels.

Acknowledgments. The research described in this paper was supported by Research and Development, Tata Steel, Jamshedpur. The authors would like to express sincere thanks to welding lab team for successfully conducting the experiments during this work.

References

Anis, M., Agustinus Ananda, P., Munir, B.: WAAM application for EPC company. In: MATEC Web of Conferences, vol. 269 (2019)

Chen, K., Huang, H., Wu, Q., Nakamura, S., Chen, B.: Experimental and finite element analysis research on the fatigue performance of CHS K-joints. Eng. Struct. **197**, 109365 (2019)

Hassani, V., Khabazi, Z., Raspall, F., Banon, C., Rosen, D.: Form-finding and structural shape optimization of the metal 3D printed multi-branch node with complex geometry. Comput. Aided Design Appl. **17**(1), 205–225 (2019)

Herion, S., de Oliveira, J.C., Packer, J.A., Christopoulos, C., Gray, M.G.: Castings in tubular structures – the state of the art. Proc. Inst. Civ. Eng. Struct. Build. **163**(6), 403–415 (2010)

Kühne, R., Feldmann, M., Citarelli, S., Reisgen, U., Sharma, R., Oster, L.: 3D printing in steel construction with the automated wire arc additive manufacturing. ce/papers **3**(3–4), 577–583 (2019)

Laghi, V., Palermo, M., Gasparini, G., Alena Girelli, V., Trombetti, T.: Geometrical characterization of wire-and-arc additive manufactured steel element. Adv. Mater. Lett. **10**(10), 695–699 (2019)

Shah, I.H., Hadjipantelis, N., Walter, L., Myers, R.J., Gardner, L.: Environmental life cycle assessment of wire arc additively manufactured steel structural components. J. Clean. Prod. **389**, 136071 (2023)

Shao, Y.-B.: Geometrical effect on the stress distribution along weld toe for tubular T- and K-joints under axial loading. J. Constr. Steel Res. **63**(10), 1351–1360 (2007)

Wang, L., Du, W., He, P., Yang, M.: Topology optimization and 3D printing of three-branch joints in treelike structures. J. Struct. Eng. **146**(1), 04019167 (2020)

Wang, L., Jin, H., Dong, H., Li, J.: Balance fatigue design of cast steel nodes in tubular steel structures. Sci. World J. **2013**, 421410 (2013)