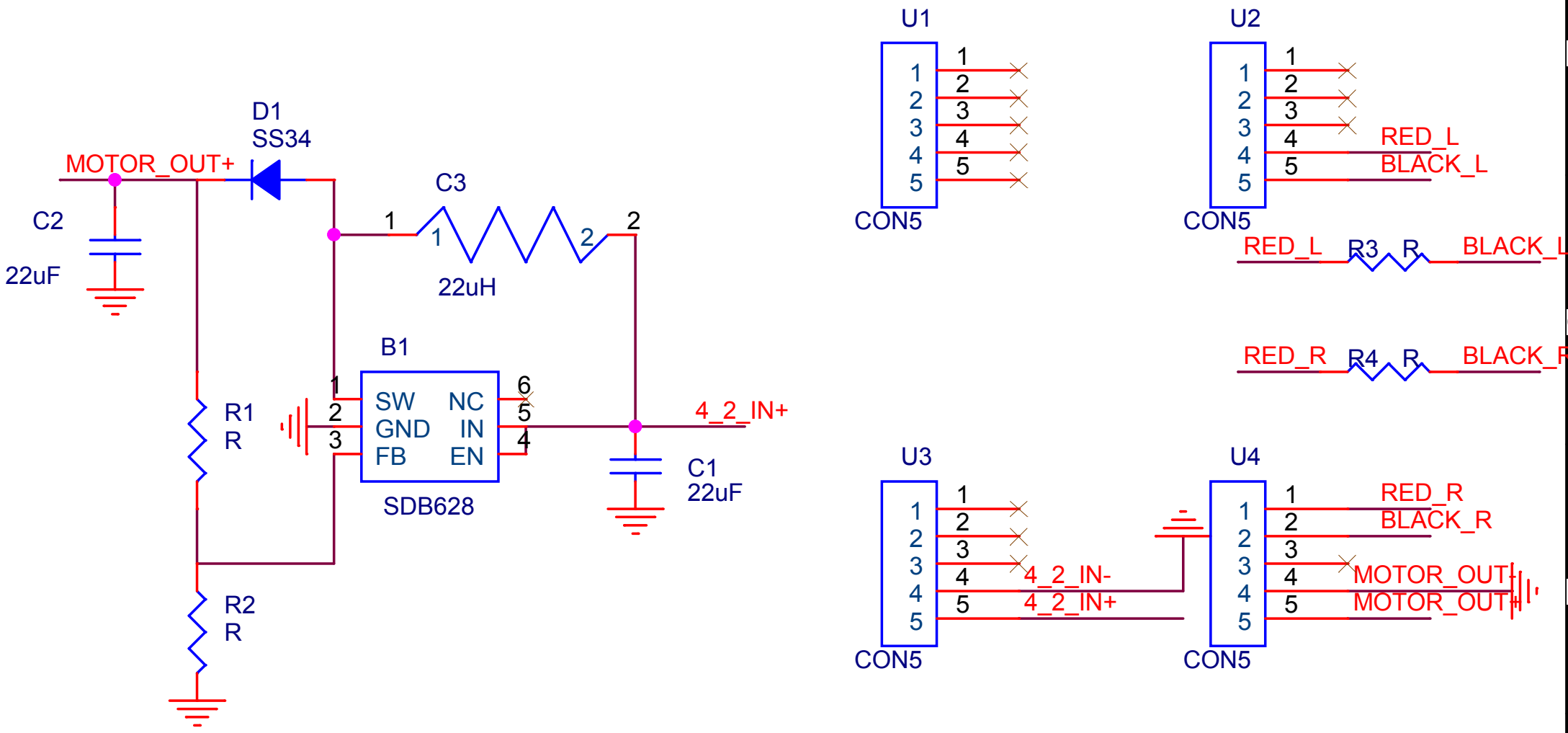

Title	RTU_BBear	
Size Custom	Document Number <Doc>	Rev v1.0
Date: Thursday, February 16, 2017	Sheet 1 of 1	