FH8852V201 IP Camera SoC

User Datasheet

Document Version：V1.1

Release Data：September 16, 2022

Shanghai Fullhan Microelectronics Co., Ltd.

Add: No . 717 Yishan Road，Block 2，Floor 6，Xuhui District，Shanghai

Tel: 0086 21 61121558

Fax: 0086 21 64066786

Copyright© Shanghai Fullhan Microelectronics Co., Ltd.

Without the written permission of the company, any unit and individual shall not arbitrarily extract, reproduce the contents of this document in part or all, and shall not be transmitted in any form.

Trademark Declaration

and Fullhan are trademarks of Shanghai Fullhan Microelectronics Co., Ltd. All other trademarks or registered trademarks mentioned herein are owned by individual owners.

Attention

The contents of this document are updated periodically due to product version upgrades or other reasons. Unless otherwise agreed, this document is used only as a guide, and all representations, information and recommendations in this document do not constitute any express or implied warranty.

Overview

The document is used to specify FH8852V201 total function and architecture.

Revision History

Date	Rev	Owner	Description
November 16, 2021	V1.0	Shenzy	Initial version
September 16, 2022	V1.1	Shenzy	Update Video Coding descriptions

TABLE OF CONTENTS

DOCUMENT VERSION：V1.1 ..... **1**

1 OVERVIEW **6**

2 SYSTEM BLOCK DIAGRAM **6**

3 FEATURES **8**

3.1 PROCESSOR 8

3.2 CIS_INPUT 8

3.3 IMAGE SIGNAL PROCESS 8

3.4 VIDEO CODING 9

3.5 INTELLIGENT PROCESSING ENGINE(NN) 9

3.6 AUDIO CODEC 9

3.7 I^2S INTERFACE 9

3.8 SDIO 10

3.9 USB 10

3.10 RTC 10

3.11 GPIO INTERFACE 10

3.12 EFUSE 11

3.13 BUILT-IN DRAM 11

3.14 NETWORK INTERFACE 11

3.15 SAFETY MODULE 11

3.16 SPI INTERFACE 11

3.17 UART INTERFACE 11

3.18 PWM OUTPUT 12

3.19 STEPPER MOTOR DRIVE CONTROLLER 12

3.20 SAR-ADC INPUT 12

3.21 I2C INTERFACE 12

3.22 RESET 13

3.23 CLOCK INPUT 13

3.24 TEMPERATURE SENSOR 13

4 CHIP PINS AND PERIPHERAL CIRCUITS 13

4.1 DEFINITION OF PIN 13

5 ELECTRICAL CHARACTERISTICS 14

5.1 POWER SUPPLY CHARACTERISTICS 14

5.2 WORKING VOLTAGE 14

5.3 I/O FEATURES 14

5.4 TEMPERATURE AND THERMAL RESISTANCE PARAMETERS 16

6 UP-AND-DOWN TIMING AND RESET 17

7 PACKAGE 19

8 BOOT MODE 22

1 Overview

FH8852V201 is a high-performance intelligent SOC chip for HD network camera applications. The chip integrates a new generation of high-performance ISP image processing module and smart h.265 video compression coding module, integrates artificial intelligence processing engine, and has excellent image processing ability, high coding quality and intelligent processing ability. At the same time, the internal integration of 512Mbit DDR2 memory, with complete peripheral interfaces required for application, including USB, SDIO and Ethernet PHY, providing users with cost-effective video application solutions.

2 System Block Diagram

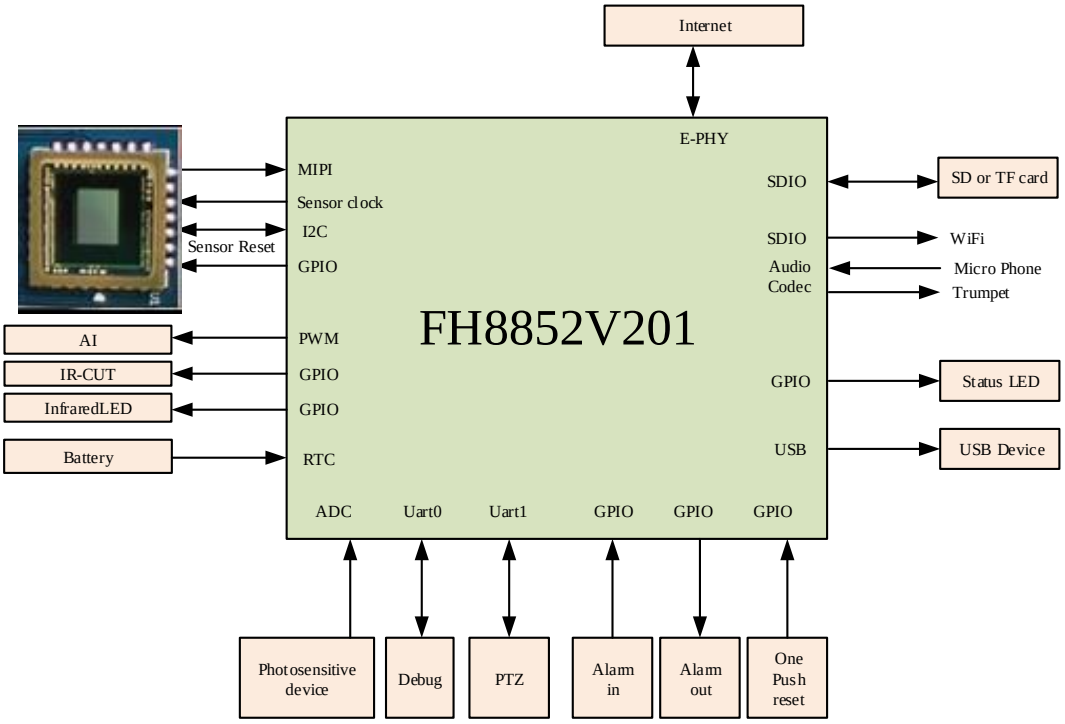

Figure 2-1 Solution Diagram

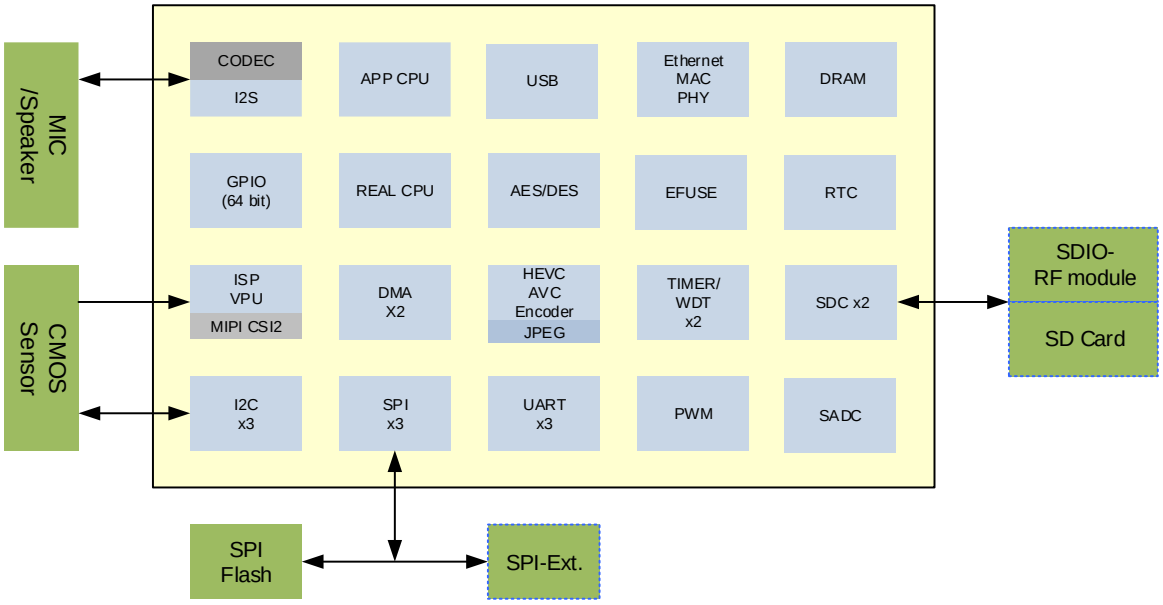

Figure 2-2 System Block Diagram

3 Features

3.1 Processor

- 32-bit RISC Master
  - Frequency 750MHz
  - 32KB I-CACHE, 32KB D-CACHE
  - Support NEON、FPU
- 32-bit RISC Slave
  - Frequency 500MHZ
  - 16KB I-CACHE, 16KB D-CACHE
  - Support MMU、FPU

3.2 CIS_Input

Video 2-lane MIPI input interface

- Support MIPI D-PHY and CSI-2（Camera Serial Interface）
- Support RGB Bayer input
- Support maximum differential clock 750MHz @2-lane
- Support provides clock for the CIS
- Support 2M(1920x1080), 3M(2304x1296)

3.3 Image Signal Process

- Support RGB Bayer data format，configure sensor output window coordinates
- Support standard bayer pattern and configure starting coordinate piont
- Support lens shading correction
- Support small angle distortion correct(angle not more than 5%)
- Support defect pixel correction
- Support dynamic range compression
- Support high-performance time-domain(3d) noise reduction
- Support high-performance spatial(2d) noise reduction
- Support high-performance CFA
- Support AE/AWB
- Support local contrast adjustment and detail enhancement
- Support color correction、chromatic space adjustment
- Support image effect adjustment(bright、sharpen、saturation、Gamma)
- Support Y/C noise reduction
- Support adaptive sharpening
- Support video scaling
- Support OSD overlying

- Support four configurable graphic
  Graphic data support color palettes and color modes

3.4 Video Coding

- Supports SMART H.265/H.264 encoding
  - Support H.265 MP，support I/P frame
  - Support H.264 BP/MP/HP，support I/P frame
  - H.265/H.264 multi-code stream real-time coding capability
    - 2560x1440@15fps + 864x480@15fps
    - 2304x1296@25fps + 864x480@25fps
    - 1980x1088@30fps + 864x480@30fps
  - Supports ROI coding
  - Support CBR/VBR/AVR
  - Reference coding rate 1080p30fps 200kbps~20Mbps
  - Support multi-channel coding
  - Support smart coding
  - Support 90、180、270 degree rotation of encoded data
  - Support frame skipping reference
- Supports JPEG encoding
  - Supports JPEG breadth is consistent with the main frame breadth
  - Supports image rotation of 90, 180 and 270 degrees

3.5 Intelligent Processing Engine(NN)

- Neural network hardware acceleration engine, 0.5 TOPS
- Supports network structures such as human shape and face

3.6 Audio Codec

Chip integrated high performance Audio Codec, support 1 single-ended microphone input, 1 single-ended Lineout output.

- Provides internal microphone bias
- Audio sampling rate: support 32KHz, 44.1KHz two series of sampling rate. The sampling rate of each series is as follows:
  -32kHz series includes sampling rates of 8kHz, 16kHz, 32kHz, and 48kHz
  -44.1kHz series sampling rates include 11.025kHz, 22.05kHz, and 44.1kHz
- Supports ADPCM, G.711, G.726, ACC and other codec methods through software

3.7 I^2S Interface

The chip only supports I2S slave mode .

- supported 8-bit and 16 bit sampling widths，sample rate 8K, 16K and 32K can be configured
- DMA data movement supporting hardware handshake

3.8 SDIO

SDIO is used to read and write SD card and EMMC devices, and supports extended peripherals (such as Bluetooth, WiFi, etc.) through SDIO protocol. The chip provides two independent SDIO controllers.

- Supports 1bit/4bit mode
- Supports EMMC 4.41
- Supports SDIO 2.0
- Maximum clock frequency 50MHz

3.9 USB

The chip supports 1 USB2.0 interface, which works in USB2.0 Host mode or USB2.0 Device mode, and does not support dynamic switching.

- USB2.0 Host supports USB2.0 protocol 480Mbps/12Mbps/1.5Mbps three transmission rates, support control transmission, batch transmission, synchronous transmission, interrupt transmission four basic transmission modes.
- USB2.0 Device supports 480Mbps/12Mbps two kinds of transmission rates, support control transmission, batch transmission, synchronous transmission, interrupt transmission four basic transmission modes.

3.10 RTC

Real-time Clock RTC is used to realize the Time display and timing alarm function.

- Support voltage range 2.0V ~ 3.3V (battery supply)
- The load capacitance of RTC crystal oscillator shall be greater than 7pF

3.11 GPIO Interface

Each GPIO pin can be configured for input or output. These pins are used to generate application-specific output signals or to collect application-specific input signals. GPIO can generate maskable interrupts based on the level or jump value.

- As the input pin, can be used as the interrupt source, interrupt signal level is effective or

along the effective configurable
- As an output pin, each GPIO pin can independently clear 0 or set 1
- Support debounce de-jitter

3.12 EFUSE

EFUSE is used for programming and reading OTP (One Time Programmable).

- Embedded with 512bit EFUSE Memory
- Supports hardware to fetch key for decryption

3.13 Built-in DRAM

- Support 16-bit DDR2 (capacity 512Mbit)
- Power 1.8V

3.14 Network Interface

- 10/100 M Ethernet PHY
- Support half duplex mode

3.15 Safety Module

The security engine is used to support secure startup mode and encryption encoding.

- Supports AES encryption and decryption hardware algorithm

3.16 SPI Interface

The SPI controller realizes serial connection and serial conversion of data, and can be used as Master for synchronous serial communication with external devices.

- Interface clock frequency is programmable, the highest frequency is 50MHz
- Serial data frame length 8bit
- Supports DMA operations
- Supports SPI synchronous serial interface, supporting single frame and continuous frame format
- Support SPI full duplex working mode, phase configurable

3.17 UART Interface

The chip has 3 UART controllers UART0, UART1 and UART2.

- Supports bit-width programmable data bits and stop bits. Data bits can be programmed to 5/6/7/8bit; The stop bit can be programmed to be 1/2bit
- Support parity, parity or no parity
- Supports transmission rate programmable
- Supports receive FIFO interrupt, send FIFO interrupt, receive timeout interrupt, error interrupt
- Supports initial interrupt status queries and post-masking interrupt queries
- Supports DMA operations

3.18 PWM Output

The chip's PWM (Pulse Width Modulation) can provide Pulse Width Modulation signal output, the chip has a total of 12 channels of PWM output.

- 50MHz working clock source
- Internal 25bit counter, the output cycle can be configured, support 1Hz~500KHz output
- Internal 25bit counter, output high level beat count configurable
- Internal 32bit counter, output pulse number can be configured, can work in a fixed number of output mode and constant output mode
- Support duty cycle configurable
- Supports channel delay output
- Supports inter-channel phase control

3.19 Stepper motor drive controller

- supports 2 groups of SPWM control outputs, and each group outputs 4 control signals
- Support 32, 64,128,256 subdivision micro step adjustment
- Support torque ripple correction technology to realize ultra-low noise micro step control

3.20 SAR-ADC Input

Successive Approximation Register (SAR) ADC realizes the conversion of external analog signals to a certain proportion of digital values, thus realizing the measurement of analog signals and can be used for power detection, button detection, etc.

- 2 channels
- 12-bit resolution
- Sampling rate up to 500kHz
- Input voltage range 0V ~ 1.8V

3.21 I2C Interface

The I2C (Inter-Integrated Circuit) controller is the Master interface, which completes the read-write access to the slave devices connected on the I2C bus. The chip has three I2C controllers.

- Supports bus mediation with multiple master devices
- Supports standard (7-bit) and extended (10-bit) addresses
- Transmission rate supports standard mode (100Kbit/s) and fast mode (400Kbit/s)

3.22 RESET

The reset management module manages the reset of the whole chip and the reset of each functional module uniformly.

- Management and control of electrical reset on
- WatchDog reset management and control
- System soft reset, function module separate soft reset control

3.23 Clock Input

- Clock requires 24MHz crystal or crystal oscillator
- Accuracy required ±20ppm

3.24 Temperature Sensor

The chip has an integrated temperature Sensor (T-sensor), and the temperature detection range is -40 ~ 125℃.

4 Chip pins and peripheral circuits

4.1 Definition of Pin

For chip pin information, please refer to the document:<FH8852V201_Pinout >

5 Electrical characteristics

5.1 Power supply characteristics

2M@30fps NN enable

Symbol	Describe	Voltage	Average current	Power consumption	Total power consumption
		V	mA	mW	mW
VDDK	Core Power supply	0.9	294	264	758
VDDIO_DDR	Built-in DDR power supply	1.8	155	279	
VDDA18 VDDIO18	Analog 1.8V Device 1.8V	1.8	39	70	
VDDIO_18OD33	Device I/O 3.3V	3.3	10	33	
VDDA33	Analog 3.3V	3.3	34	112	

5.2 Working voltage

Pin names	Describe	Min	Typical	Max	Unit
VDDK	Core Power supply	-5%	0.9	+5%	V
VDDIO_DDR	Built-in DDR power supply	-5%	1.8	+5%	V
VDDA18 VDDIO18	Analog 1.8V Device 1.8V	-10%	1.8	+10%	V
VDDIO_18OD33	Device I/O 3.3V	-10%	3.3	+10%	V
VDDA33	Analog 3.3V	-10%	3.3	+10%	V
USB_VBUS	USB VBUS Power supply	-5%	5.0	+5%	V
VDDA33_RTC	RTC Power supply	2.0	3.0	3.3	V

5.3 I/O features

DC Electrical Specifications（VDDIO_18OD33=3.3V）

Symbol	Describe	Min	Typical	Max	Unit	Note
VDDIO_18OD33	IO voltage	2.97	3.3	3.63	V	/
VIH	Input high voltage	2	-	3.63	V	/
VIL	Input low voltage	-0.3	-	0.8	V	/

IL	Input leakage current	-	-	10	μA	/
IOZ	Tristate output leakage current	-	-	10	μA	/
VOH	Output high voltage	2.4	-	-	-	/
VOL	Output low voltage	-	-	0.4	V	/
RPU	Internal pull-up resistor	33	59	91	kΩ	/
RPD	Internal pull-down resistor	34	61	108	kΩ	/

DC Electrical Specifications（VDDIO18=1.8V）

Symbol	Describe	Min	Typical	Max	Unit	Note
VDDIO18	IO voltage	1.62	1.8	1.98	V	/
VIH	Input high voltage	0.65*VDDIO	-	1.98	V	/
VIL	Input low voltage	-0.3	-	0.35*VDDIO	V	/
IL	Input leakage current	-	-	10	μA	/
IOZ	Tristate output leakage current	-	-	10	μA	/
VOH	Output high voltage	VDDIO-0.45	-	-	V	/
VOL	Output low voltage	-	-	0.45	V	/
RPU	Internal pull-up resistor	55	79	122	kΩ	/
RPD	Internal pull-down resistor	51	87	169	kΩ	/

DC Electrical Specifications DDR2（VDDIO_DDR =1.8V）

Symbol	Describe	Min	Typical	Max	Unit	Note
VDDIO_DDR	Interface voltage	1.71	1.8	1.89	V	
VTT	Termination	/	/	/	mV	

$V_{IH(DC)}$	Input high voltage	Vref+0.125	/	/	V	
$V_{IL(DC)}$	Input low voltage	/	/	Vref-0.125	V	

AC Electrical Specifications　DDR2（VDDIO_DDR =1.8V）

Symbol	Describe	Min	Max	Unit
$V_{IH(AC)}$	Input high voltage	Vref+0.2	/	V
$V_{IL(AC)}$	Input low voltage	/	Vref-0.2	V

5.4 Temperature and thermal resistance parameters

Parameter	Symbol	Min	Typical	Max	Unit
Ambient temperature	T_A	-20	-	70	℃
Tj(junction temperature)	Tj	-	-	116	℃
Junction-to-ambient	θJA	-	34.6	-	℃/W
Junction-to-board	θJB	-	17.0	-	℃/W
Junction-to-case	θJC	-	13.9	-	℃/W

6 Up-and-down timing and reset

Up timing

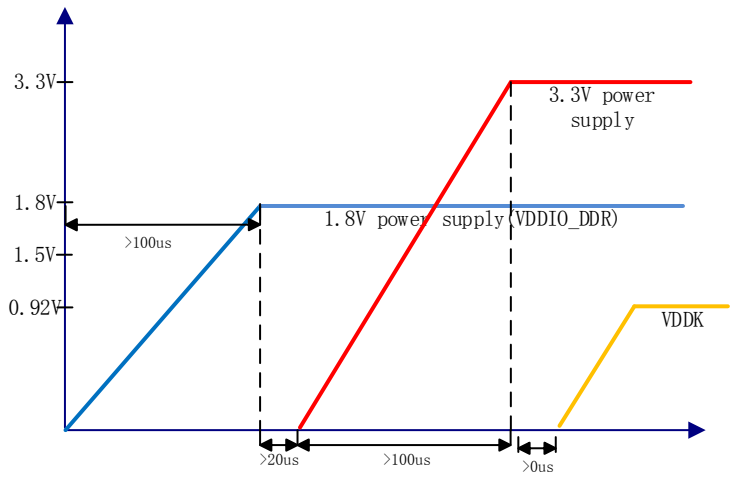

1、 In order to meet the requirement of IO differential pressure, VDDIO18 needs to be powered on before VDDIO33.

2、 In order to ensure that the internal POR can effectively reset the system, the VDDK requires the final power on.

Down timing

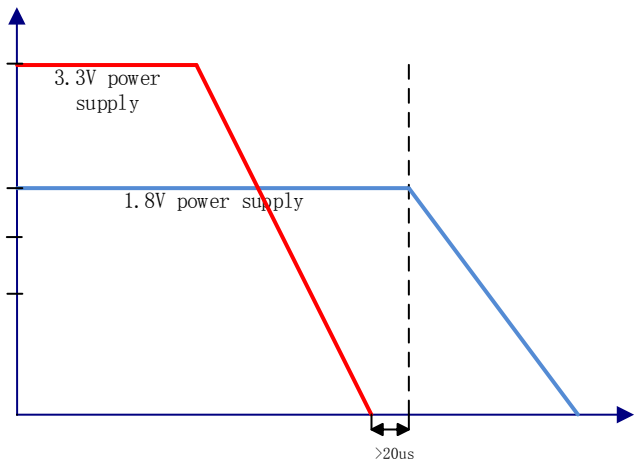

In order to meet the requirement of IO differential pressure, VDDIO18 needs to power down after VDDIO33

Reset request

To ensure successful startup, an external reset chip must be installed. The external reset signal of the main chip remains active (low level) until all power supplies are stabilized at the specification voltage. The chip input oscillator clock is required to be stable before the reset signal is released. Where, Tc refers to the time from 1.8V voltage energize to reset release; TR refers to the time from power-on completion to reset release.

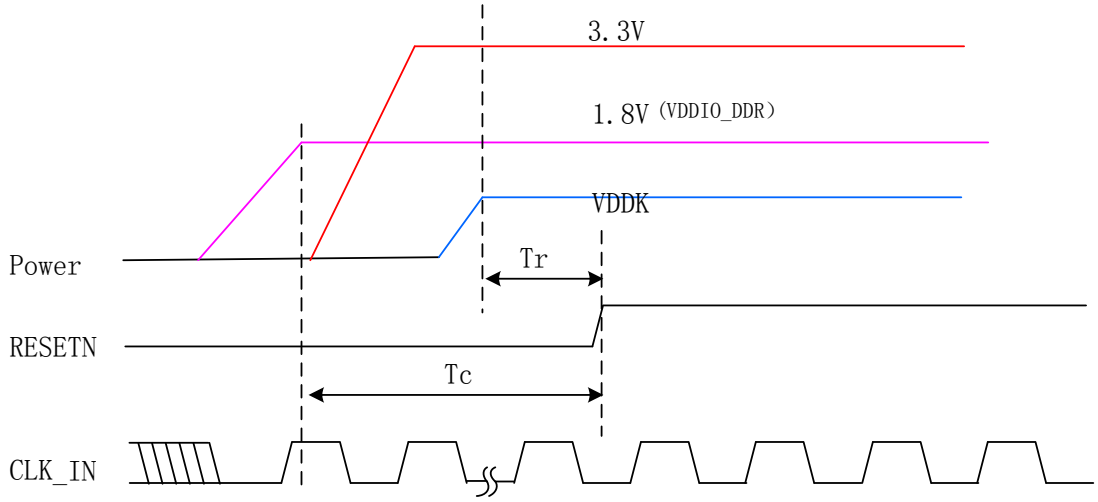

Reset and clock

Reset and clock timing required

	Min	Typical	Max	Unit
Tr	>0		—	ms
Tc			—	ms

7 Package

The chip adopts QFN package, the package size is 9mm x 9mm, the pin spacing is 0.35mm, and the total number of pins is 88.

For detailed packaging, please refer to the following figure (unit: mm) :

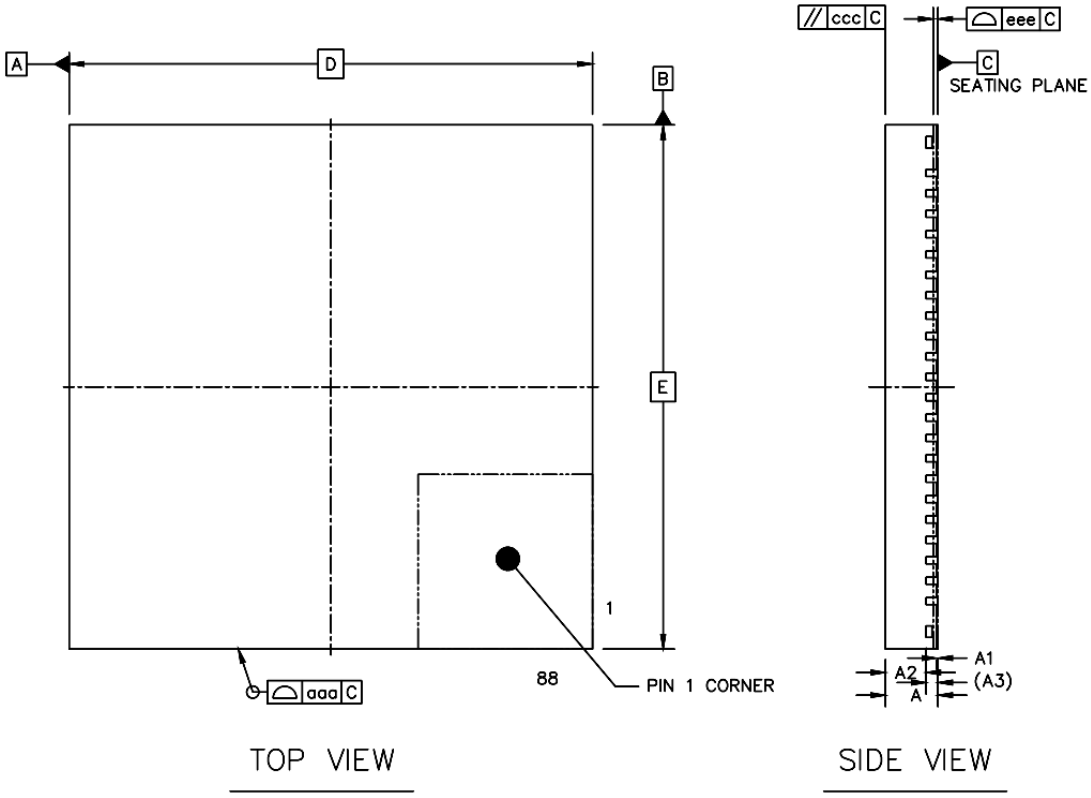

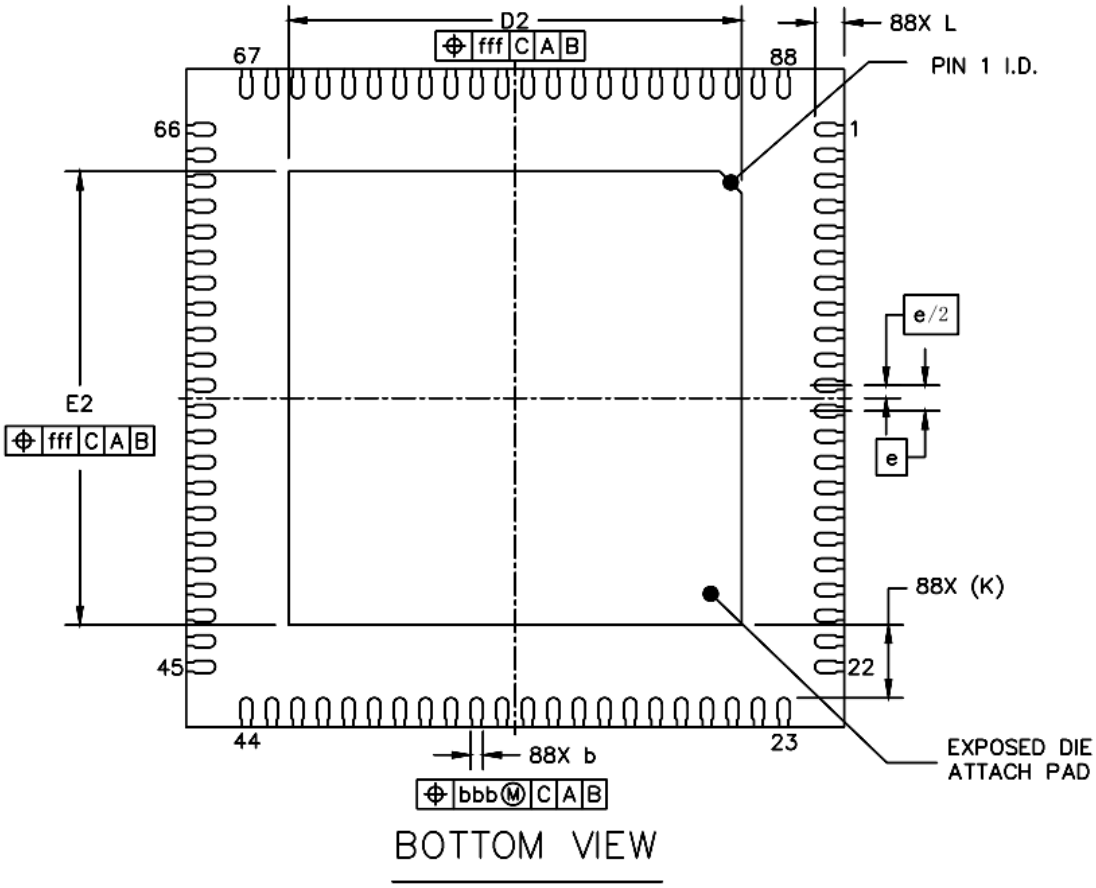

		SYMBOL	MIN	NOM	MAX
TOTAL THICKNESS		A	0.85	0.9	0.95
STAND OFF		A1	0	0.02	0.05
MOLD THICKNESS		A2	---	0.7	---
L/F THICKNESS		A3		0.203 REF	
LEAD WIDTH		b	0.12	0.17	0.22
BODY SIZE	X	D		9 BSC	
	Y	E		9 BSC	
LEAD PITCH		e		0.35 BSC	
EP SIZE	X	D2	6.1	6.2	6.3
	Y	E2	6.1	6.2	6.3
LEAD LENGTH		L	0.3	0.4	0.5
LEAD TIP TO EXPOSED PAD EDGE		K		1 REF	
PACKAGE EDGE TOLERANCE		aaa		0.1	
MOLD FLATNESS		ccc		0.1	
COPLANARITY		eee		0.08	
LEAD OFFSET		bbb		0.07	
EXPOSED PAD OFFSET		fff		0.1	

RECOMMANDED LAND PATTERN

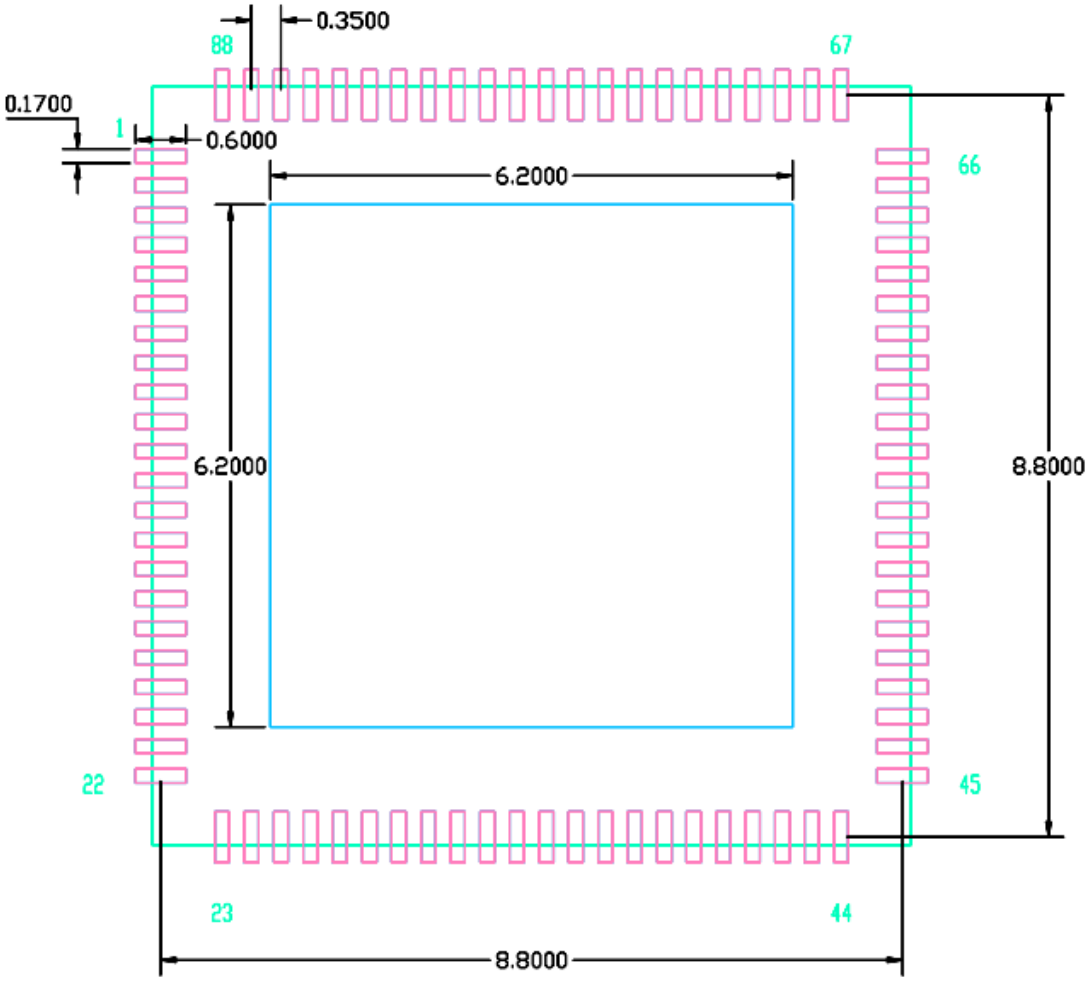

SOLDER MASK DETAILS

NON SOLDER MASK DEFINED

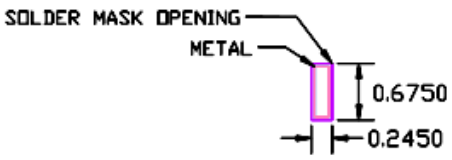

8 BOOT Mode

By reading the level state of GPIO_30, GPIO_31 and GPIO_32, FH8852V201 can realize the following loading methods for startup:

Figure 8-1 Boot mode

GPIO State level			Boot Mode
BOOT_MODE	BOOT_SEL1	BOOT_SEL0	
0	0	0	UART0 load ->SD1 eMMC mode
0	0	1	UART0 load ->Nand Flash mode
0	1	0	UART0 load ->SD0 eMMC mode
0	1	1	UART0 load ->Nor Flash mode
1	0	0	SD1 EMMC mode (eMMC load)
1	0	1	Nand Flash mode（SPI Nand Flash load）
1	1	0	SD0 eMMC mode（eMMC load）
1	1	1	Nor Flash mode（SPI Nor Flash load）

- UART0 mode: UART serves as the debugger and downloads the code into SPI NOR Flash via Xmodem, or directly loads the code into the chip for execution.
- NAND FLASH mode: The chip starts from the SPI NAND FLASH loading code.
- SD0 EMMC mode: The chip starts from the SD0 EMMC loading code.
- SD1 EMMC mode: The chip starts from the SD1 EMMC loading code.
- NOR FLASH MODE: Recommended working mode, the chip starts from SPI NOR FLASH loading code.