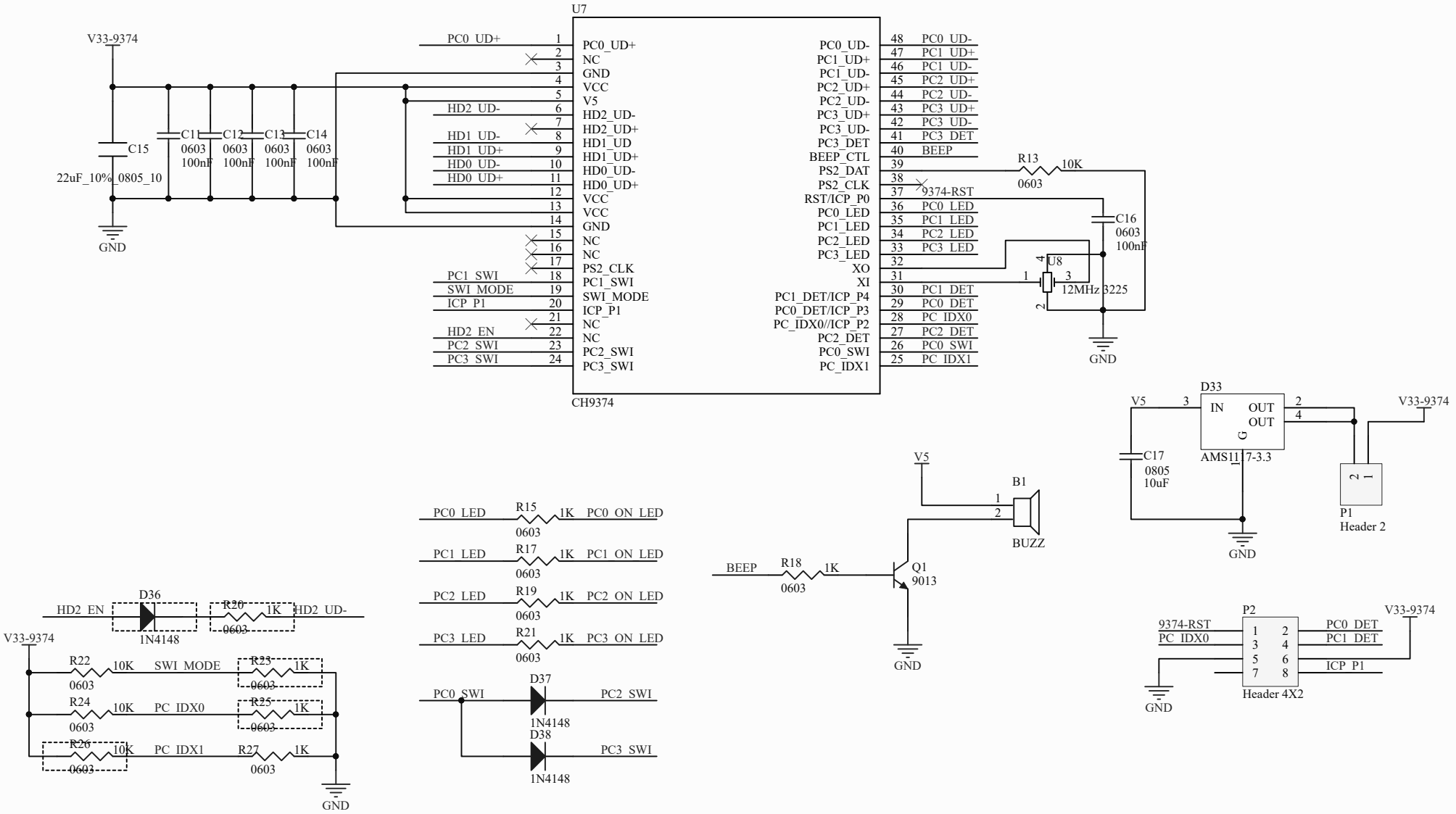

Title		
Size A4	Number	Revision
Date: 2018/4/8		Sheet of
File: D:\Projects\..\CH9374.SchDoc		Drawn By: