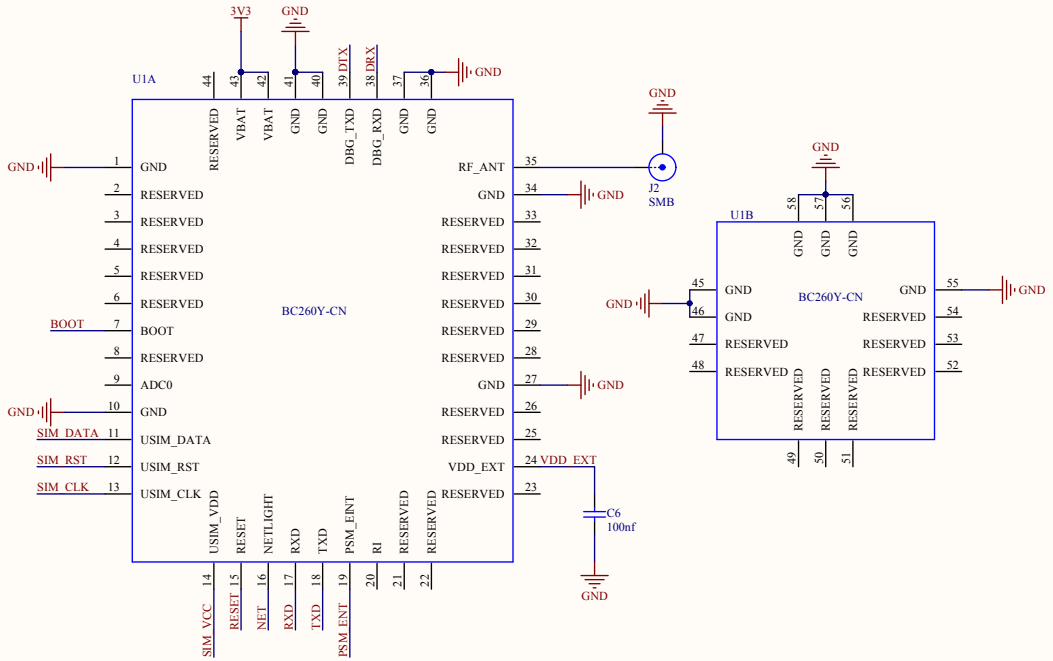

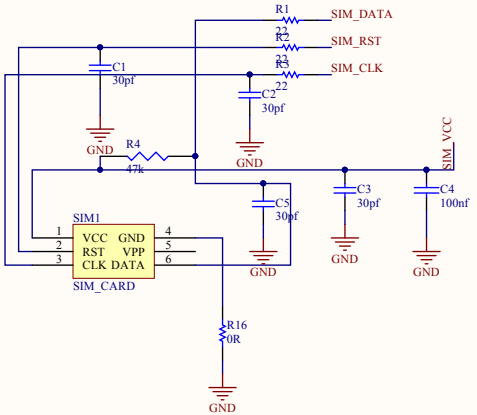

SIM卡电路

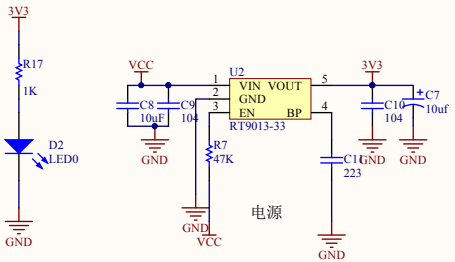

电源

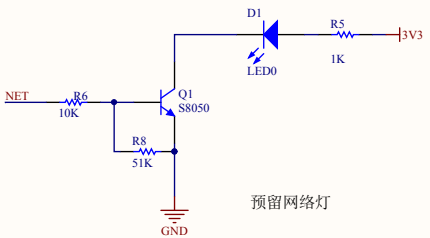

预留网络灯

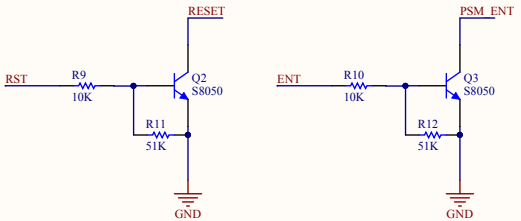

控制电路

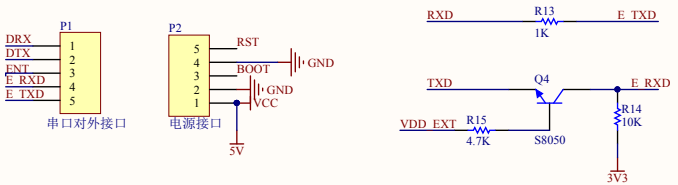

串口匹配电路

Title		
Size A3	Number	Revision
Date: 2021-04-02		Sheet of
File: E:\STM32设计\..\Quectel_BC260Y-CN_Series_HW_Design_V1.0.SchDoc		Drawn by: