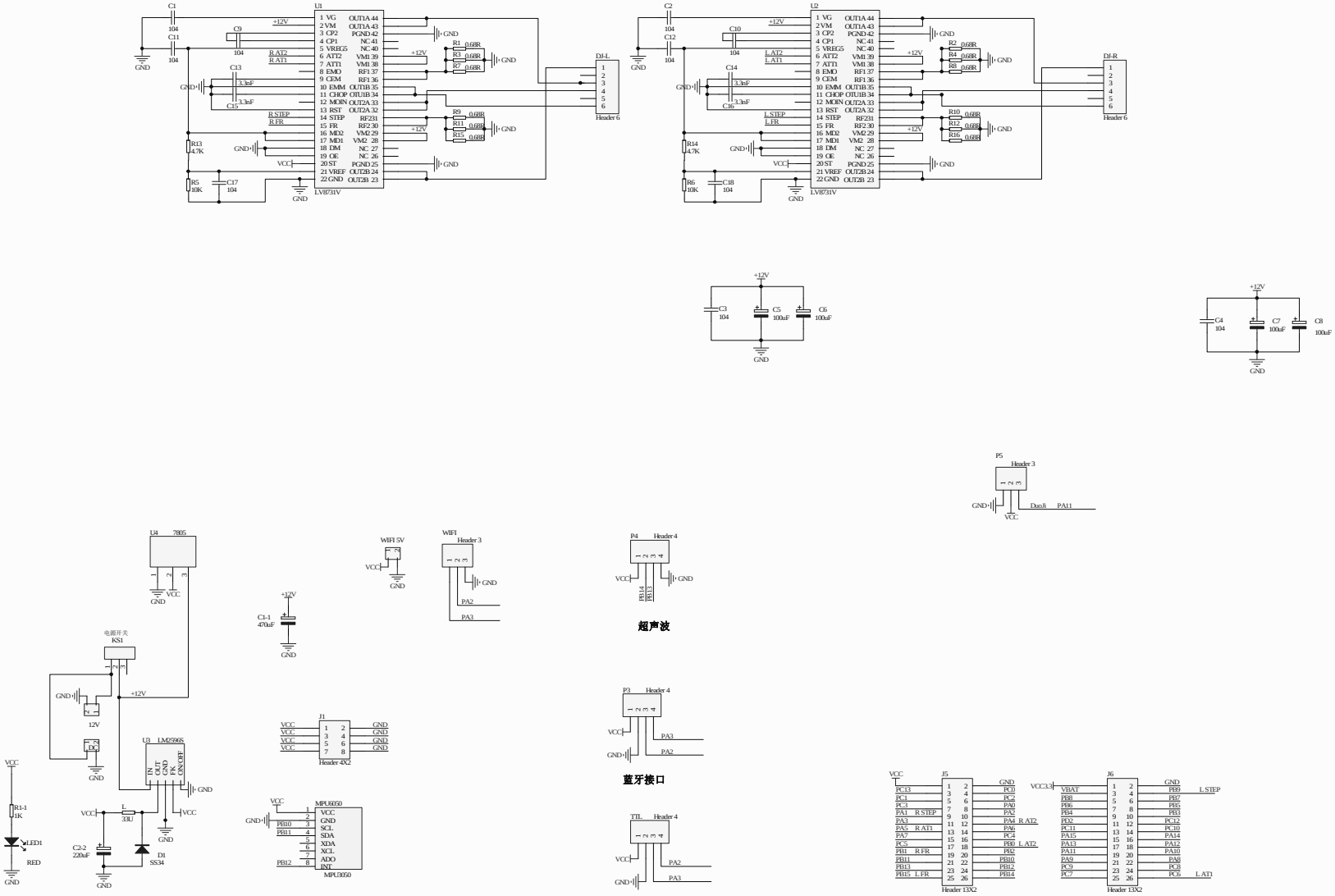

Title		
Size A2	Number	Revision
Date: 2015/9/9 星期三		Sheet of
File: H:\1. PCB图书\..\ARM-2PH.SchDoc		Drawn By: