Japanese Journal of Applied Physics

The Japan Society of Applied Physics

Magneto-Optical Effect and Effective Dielectric Tensor in Composite Material Containing Magnetic Fine Particles or Thin Layers

To cite this article: Masanori Abe and Manabu Gomi 1984 *Jpn. J. Appl. Phys.* **23** 1580

View the article online for updates and enhancements.

You may also like

- Effective dielectric constant model of electromagnetic backscattering from stratified air–sea surface film–sea water medium
Tao Xie, , William Perrie et al.

- Magnetooptical response of permalloy multilayer structures on different substrate in the IR–VIS–UV spectral range
Rajkumar Patra, Roland Mattheis, Hartmut Stöcker et al.

- On the theory of light propagation in crystalline dielectrics
Marius Dommermuth and Nils Schopohl

This content was downloaded from IP address 134.157.254.7 on 02/05/2022 at 09:55

JAPANESE JOURNAL OF APPLIED PHYSICS
VOL. 23, NO. 12, DECEMBER, 1984 pp. 1580–1585

Magneto-Optical Effect and Effective Dielectric Tensor in Composite Material Containing Magnetic Fine Particles or Thin Layers

Masanori ABE and Manabu GOMI

Department of Physical Electronics, Tokyo Institute of Technology, Ookayama, Meguro-ku, Tokyo 152

(Received June 1, 1984; accepted for publication September 22, 1984)

We have derived the effective dielectric tensor, including the off-diagonal elements, for a composite material with a structure much smaller than the wavelength of visible light. The boundary problem of the potential has been solved for the electric field induced in a magnetic ellipsoid exposed to a uniform external electric field. The result has been extended to yield the effective dielectric tensor for a composite material containing magnetic fine particles or thin layers dispersed in a nonmagnetic matrix. The component materials may be dielectric or conducting. Using the effective tensor, we have described the light-wave propagation and the magneto-optical effect, together with the light absorption, in the composite material. The criterion for applying the effective tensor is discussed.

§1. Introduction

Current ultra-thin-film technology permits the fabrication of new composite materials with extremely fine structures, such as super-lattices[1] or composition-modulated structures.[2] They exhibit novel magnetic, optical, and other properties which the individual component materials (submaterials) do not. We can, therefore, fabricate a composite material with a structure much smaller than the wavelength of visible light, opening up the possibility of producing new magneto-optical materials surpassing existing materials. However, the magneto-optical property of composite materials has not yet been studied,* although their mechanical, dielectric, piezo-electric, and magneto-electric properties have been studied.[3] This paper describes a theoretical study of the magneto-optical effect in finely-structured materials.

In propagating an electromagnetic wave, a composite material behaves as if it were homogeneous, as long as the dimension of the structure is much smaller than the wavelength of the wave. The propagation of an electromagnetic wave in such a material can be described in terms of effective dielectric and magnetic permeability tensors, $\hat{\varepsilon}$ and $\hat{\mu}$. Rytov[5] has formulated the $\hat{\varepsilon}$ and $\hat{\mu}$ tensors for a medium composed of two thin stratified layers having complex dielectric and magnetic permeabilities. Ever since the end of the 19th century, researchers have investigated the propagation of waves in a composite medium containing dielectric particles embedded in a dielectric matrix.[6] The results have been summarized by Bragg and Pippard,[7] giving a simplified formula for the $\hat{\varepsilon}$ tensor.

A composite material with a fine structure exhibits anisotropy in the optical velocity, even though the submaterials (matrix and particles (layers)) are optically isotropic. We call this "form birefringence", because it arises from the anisotropy of the structure.[6] This form birefringence has been observed in several composite materials, such as GaAs–AlAs multilayer films,[8] colloid suspensions,[9] and pored Al_2O_3 films,[10] and has been explained in terms of the effective dielectric tensor.** Studies so far reported on the effective tensors $\hat{\varepsilon}$ and $\hat{\mu}$ concern only the diagonal elements. There have been no studies on the off-diagonal elements and hence no studies on the gyromagnetic or magneto-optical effects which arise from them.***

In the following sections, first we will derive the effective dielectric tensor, not only the diagonal but also the off-diagonal elements, for a material in which fine magnetic particles are dispersed. The result will be extended to composite materials of various structures, especially the multilayer structure. We will describe the magneto-optical effect of a composite material in terms of the effective tensor, and discuss the criterion for applying the effective tensor.

§2. Derivation of Effective Dielectric Tensor for Array of Oriented Ellipsoids

In this section we derive the effective dielectric tensor for a finely-structured material composed of two dielectric submaterials.

Let us assume that magnetic fine ellipsoids are sparsely arrayed in a nonmagnetic matrix of dielectric constant ε_1. Each ellipsoid is so oriented that the principal axes of length a, b and c are directed in the x, y and z directions, respectively, and the magnetization is directed in the z direction (Fig. 1). The dielectric tensor for the ellipsoid is of the form,[11,12]****

*The Magneto-optical effect in multilayer enhancing magneto-optical rotation has been studied extensively.[4] However, the previous multilayers have thicknesses larger than (or of the same order as) the wavelength of light.

**In the optical region, the magnetic permeability tensor reduces to a scalar equivalent to the permeability in vacuum, playing an unimportant role in the electromagnetic propagation.

***Suspensions of ferromagnetic fine particles show magnetically-induced birefringence, which is, however, not a true magneto-optical effect, since it is associated with the diagonal elements of the $\hat{\varepsilon}$ tensor.[9]

****Strictly speaking, the z component of the diagonal element differs slightly from the x (or y) component; but this is neglected here for simplicity.

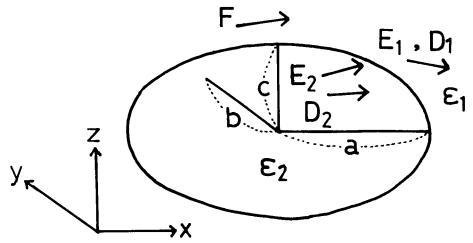

Fig. 1. Fields in and around an ellipsoid with a dielectric tensor ε_2 embedded in a matrix with a dielectric constant ε_1. The principal axes of length a, b and c, are parallel to the x, y and z directions, respectively. $\boldsymbol{F}$: applied field, $\boldsymbol{E}_1$ ($\boldsymbol{D}_1$): electric (displacement) field around ellipsoid; $\boldsymbol{E}_2$ ($\boldsymbol{D}_2$): electric (displacement) field inside ellipsoid.

$$\varepsilon_2=\begin{bmatrix} \varepsilon_2 & i\gamma & 0 \\ -i\gamma & \varepsilon_2 & 0 \\ 0 & 0 & \varepsilon_2 \end{bmatrix} \tag{1}$$

where the relation

$$|\gamma/\varepsilon_2| \ll 1 \tag{2}$$

holds, and ε_2, as well as ε_1, is a real number.

Let a uniform electric field, $\boldsymbol{F}$, be applied to the ellipsoid. The field induces dielectric polarization, which again induces an electric field. The field around and inside the ellipsoid, $\boldsymbol{E}_1$ and $\boldsymbol{E}_2$, respectively, should satisfy the boundary condition

$$\begin{cases} \boldsymbol{n}\times(\boldsymbol{E}_2-\boldsymbol{E}_1)=0 & (3) \\ \boldsymbol{n}\cdot(\boldsymbol{D}_2-\boldsymbol{D}_1)=0 & (4) \end{cases}$$

at the surface of the ellipsoid.[13] Here

$$\begin{cases} \boldsymbol{D}_1=\varepsilon_1\boldsymbol{E}_2 & (5) \\ \boldsymbol{D}_2=\varepsilon_2\cdot\boldsymbol{E}_2 & (6) \end{cases}$$

are the electric displacement around and in the ellipsoid, respectively, and $\boldsymbol{n}$ stands for a normal vector at the ellipsoid surface. Expressing the fields in terms of potentials, i.e.,

$$\begin{cases} \boldsymbol{F}=-\nabla\phi_0 & (7) \\ \boldsymbol{E}_1=-\nabla\phi_1 & (8) \\ \boldsymbol{E}_2=-\nabla\phi_2, & (9) \end{cases}$$

and expanding the potentials ϕ_0, ϕ_1 and ϕ_2 with ellipsoidal coordinates, we can obtain the relation among the fields $\boldsymbol{E}_1$, $\boldsymbol{E}_2$ and $\boldsymbol{F}$, as given in the Appendix.

Thus we have

$$\boldsymbol{F}=[\mathbf{1}+(\varepsilon_2-\varepsilon_1)\varepsilon_1^{-1}\mathbf{N}]\cdot\boldsymbol{E}_2, \tag{10}$$

provided eq. (2) holds. Here, $\mathbf{1}$ and $\mathbf{N}$ represent the identical and the depolarization tensors, respectively, with elements

$$1_{ij}=\begin{cases} 1 & (i=j) \\ 0 & (i\neq j) \end{cases} \quad (i,j=x,y,z) \tag{11}$$

$$N_{ij}=\begin{cases} N_i & (i=j) \\ 0 & (i\neq j). \end{cases} \quad (i,j=x,y,z) \tag{12}$$

Equation (10) is the same as that obtained for $\gamma=0$, a uniform field being induced inside the magnetic ellipsoid as in a nonmagnetic one.

Since the field outside the ellipsoid differs from $\boldsymbol{F}$ only around the surface, the average field over the matrix is practically equal to $\boldsymbol{F}$, as long as the array of ellipsoids is not dense.[7] We can thus obtain the field, $\hat{\boldsymbol{E}}$, averaged over the whole structure by summing the average field in the matrix (i.e. $\boldsymbol{F}$) and the field induced in the ellipsoids (i.e. $\boldsymbol{E}_2$). Letting the volume fraction of the ellipsoids be f, and hence the volume fraction of the matrix be $1-f$, we obtain $\hat{\boldsymbol{E}}$ as the average of $\boldsymbol{E}_2$ and $\boldsymbol{F}$ weighted by the respective volume fractions,[7]

$$\hat{\boldsymbol{E}}=f\boldsymbol{E}_2+(1-f)\boldsymbol{F}. \tag{13}$$

Here, we assume f to be considerably smaller than 1.

The dielectric displacement, $\hat{\boldsymbol{D}}$, averaged over the whole structure, is expressed by

$$\hat{\boldsymbol{D}}=\varepsilon_1\hat{\boldsymbol{E}}+f\boldsymbol{P}', \tag{14}$$

where $\boldsymbol{P}'$ stands for the dielectric polarization with respect to the matrix, i.e.,[14]

$$\boldsymbol{P}'=(\varepsilon_2-\varepsilon_1\mathbf{1})\cdot\boldsymbol{E}_2. \tag{15}$$

Combining eqs. (14) and (15), we have

$$\hat{\boldsymbol{D}}=\varepsilon_1\hat{\boldsymbol{E}}+f(\varepsilon_2-\varepsilon_1\mathbf{1})\cdot\boldsymbol{E}_2. \tag{16}$$

The effective tensor $\hat{\varepsilon}$ connects $\hat{\boldsymbol{D}}$ and $\hat{\boldsymbol{E}}$ as

$$\hat{\boldsymbol{D}}=\hat{\varepsilon}\cdot\hat{\boldsymbol{E}}. \tag{17}$$

Substituting eq. (10) into eq. (13) gives

$$\boldsymbol{E}_2=\mathbf{A}\cdot\hat{\boldsymbol{E}} \tag{18}$$

where $\mathbf{A}$ is a diagonal tensor with elements

$$A_{ij}=\begin{cases} [1+(1-f)(\varepsilon_2-\varepsilon_1)\varepsilon_1^{-1}N_j]^{-1} & (i=j) \\ 0 & (i\neq j) \end{cases} \tag{19}$$

Substituting eq. (18) into eq. (16), we obtain $\hat{\varepsilon}$ of eq. (17) in the form

$$\hat{\varepsilon}=\begin{bmatrix} \hat{\varepsilon}_x & i\hat{\gamma} & 0 \\ -i\hat{\gamma}' & \hat{\varepsilon}_y & 0 \\ 0 & 0 & \hat{\varepsilon}_z \end{bmatrix} \tag{20}$$

where

$$\begin{cases} \hat{\varepsilon}_j=\varepsilon_1+f(\varepsilon_2-\varepsilon_1)/[1+(1-f)(\varepsilon_2-\varepsilon_1)\varepsilon_1^{-1}N_j] \\ \quad (j=x,y,z) & (21a) \\ \hat{\gamma}=\gamma f/[1+(1-f)(\varepsilon_2-\varepsilon_1)\varepsilon_1^{-1}N_y] & (21b) \\ \hat{\gamma}'=\gamma f/[1+(1-f)(\varepsilon_2-\varepsilon_1)\varepsilon_1^{-1}N_x]. & (21c) \end{cases}$$

The formula for the diagonal element (eq. (21a)) agrees with that derived by Bragg and Pippard.[7] Equation (21) holds when ε_1, ε_2, γ, and therefore $\hat{\varepsilon}_j$, $\hat{\gamma}$, $\hat{\gamma}'$, are specific dielectric constants.

§3. Effective Dielectric Tensor and Magneto-Optical Effect for Various Structures

In this section, we apply the effective tensor elements of eq. (21) to composite materials of various structures as shown in Fig. 2(a)~(f). The electromagnetic propagation and the magneto-optical effect are described in terms of the effective tensor. The criterion for applying the effective tensor will be described in the next section.

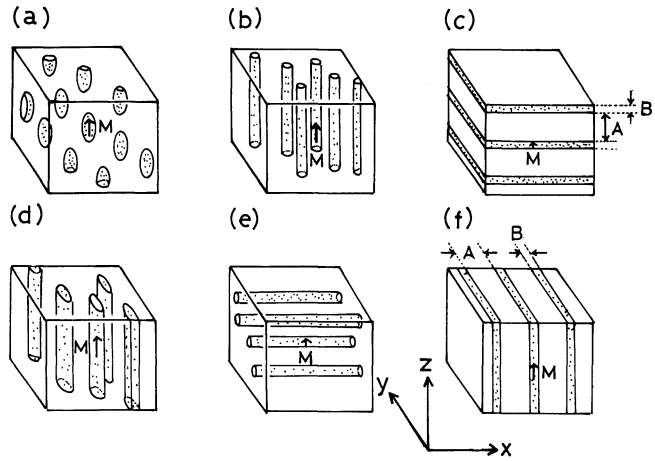

Fig. 2. Composite materials of various structures with a magnetic submaterial dispersed in a nonmagnetic matrix. The magnetization, $\boldsymbol{M}$, is directed in the z direction. The shape and demagnetization factor are: (a) spheroid; $N_x=N_y=N$, $N_z=1-2N$, (b) cylinder; $N_x=N_y=1/2$, $N_z=0$, (c) layer; $N_x=N_y=0$, $N_z=1$, (d) elliptical cylinder; $N_x\neq N_y$, $N_z=0$, (e) cylinder; $N_x=0$, $N_y=N_z=1/2$, and (f) layer; $N_x=1$, $N_y=N_z=0$.

First we consider (a)~(c), where $N_x=N_y$, or the shape of the magnetic submaterial, is symmetrical about the magnetization direction (the z axis):

(a) spheroid (or shphere);
$N_x=N_y=N$, $N_z=1-2N$ ($N=1/3$ corresponds to a sphere),

$$\begin{cases}\hat{\varepsilon}_x=\hat{\varepsilon}_y=\varepsilon_1+f(\varepsilon_2-\varepsilon_1)/[1+(1-f)(\varepsilon_2-\varepsilon_1)\varepsilon_1^{-1}N] & (22a)\\ \hat{\varepsilon}_z=\varepsilon_1+f(\varepsilon_2-\varepsilon_1)/[1+(1-f)(\varepsilon_2-\varepsilon_1)\varepsilon_1^{-1}(1-2N)] & (22b)\\ \hat{\gamma}=\hat{\gamma}'=\gamma f/[1+(1-f)(\varepsilon_2-\varepsilon_1)\varepsilon_1^{-1}N]. & (22c)\end{cases}$$

(b) cylinder with length infinitely larger than its radius;
$N_x=N_y=1/2$, $N_z=0$,

$$\begin{cases}\hat{\varepsilon}_x=\hat{\varepsilon}_y=\varepsilon_1+f(\varepsilon_2-\varepsilon_1)/[1+(1-f)(\varepsilon_2-\varepsilon_1)(2\varepsilon_1)^{-1}] & (23a)\\ \hat{\varepsilon}_z=(1-f)\varepsilon_1+f\varepsilon_2. & (23b)\\ \hat{\gamma}=\hat{\gamma}'=\gamma f/[1+(1-f)(\varepsilon_2-\varepsilon_1)(2\varepsilon_1)^{-1}]. & (23c)\end{cases}$$

(c) Layer;
$N_x=N_y=0$, $N_z=1$,

$$\begin{cases}\hat{\varepsilon}_x=\hat{\varepsilon}_y=(1-f)\varepsilon_1+f\varepsilon_2 & (24a)\\ \hat{\varepsilon}_z=[(1-f)/\varepsilon_1+f/\varepsilon_2]^{-1} & (24b)\\ \hat{\gamma}=\hat{\gamma}'=\gamma f. & (24c)\end{cases}$$

In each case, $\hat{\varepsilon}_x=\hat{\varepsilon}_y\neq\hat{\varepsilon}_z$ and $\hat{\gamma}=\hat{\gamma}'$, and the whole structure behaves as a uniaxial crystal magnetized along the axis of symmetry (the z axis). Thus, normal modes of a linearly-polarized plane wave propagate along the symmetry axis. As will be shown in the next section, the above formula for the $\hat{\varepsilon}$ tensor holds even when ε_1, ε_2, and γ are complex numbers. Therefore, the Faraday rotation and ellipticity angles, $\hat{\Theta}_F$, and $\hat{\Psi}_F$, respectively, per unit length along the symmetry axis, are expressed in a complex form,[11] as

$$\hat{\Theta}_F-i\hat{\Psi}_F=(\pi/\lambda)\hat{\gamma}/\hat{\varepsilon}_x^{1/2}, \tag{25}$$

where λ is the wavelength of the light.

The polar Kerr rotation and ellipticity angles, $\hat{\Theta}_K$ and $\hat{\Psi}_K$ respectively, are written[11] as

$$\hat{\Theta}_K-i\hat{\Psi}_K=-i\hat{\gamma}/[(\hat{\varepsilon}_x^{1/2}(\hat{\varepsilon}_x-1)]. \tag{26}$$

The absorption coefficient for propagation along the symmetry axis is given by

$$\hat{\alpha}=(4\pi/\lambda)\,\mathrm{Im}\,\hat{\varepsilon}_x^{1/2}, \tag{27}$$

and the form birefringence[6] by

$$\hat{\delta}=(2\pi/\lambda)(\hat{\varepsilon}_z-\hat{\varepsilon}_x)/\hat{\varepsilon}_z^{1/2}. \tag{28}$$

Next, we consider the case of $N_x\neq N_y$, or the case in which the structure is not symmetrical about the magnetization direction, as shown in (d)~(f) of Fig. 2. In this case, we obtain the relations

$$\begin{cases}\hat{\varepsilon}_x\neq\hat{\varepsilon}_y & (29a)\\ \hat{\gamma}\neq\hat{\gamma}'. & (29b)\end{cases}$$

For example, in (f), where the magnetic submaterial is layer-shaped;
$N_x=1$, $N_y=N_z=0$, and

$$\begin{cases}\hat{\varepsilon}_x=[(1-f)/\varepsilon_1+f/\varepsilon_2]^{-1} & (30a)\\ \hat{\varepsilon}_y=\hat{\varepsilon}_z=(1-f)\varepsilon_1+f\varepsilon_2 & (30b)\\ \hat{\gamma}=\gamma f & (30c)\\ \hat{\gamma}'=\gamma f/[1+(1-f)(\varepsilon_2-\varepsilon_1)\varepsilon_1^{-1}]. & (30d)\end{cases}$$

Equation (29b) means that the effective tensor does not follow the generalized symmetry relation of $\varepsilon_{ij}(-\boldsymbol{M})=\varepsilon_{ji}(\boldsymbol{M})$, where $\boldsymbol{M}$ stands for magnetization.

Using the effective tensor, we can obtain the effective index $n_\pm$ of refraction for propagation in the z direction,

$$n_\pm=[\hat{\varepsilon}_x+\hat{\varepsilon}_y\pm\{(\hat{\varepsilon}_x-\hat{\varepsilon}_y)^2+4\hat{\gamma}\hat{\gamma}'\}^{1/2}]^{1/2}, \tag{31}$$

and the normal modes,

$$\begin{pmatrix}E_x\\E_y\end{pmatrix}=\begin{pmatrix}1\\-i/\alpha\end{pmatrix}\exp\,[2\pi i(ft-n_+z/\lambda)] \tag{32a}$$

$$\begin{pmatrix}E_x\\E_y\end{pmatrix}=\begin{pmatrix}1\\i\alpha'\end{pmatrix}\exp\,[2\pi i(ft-n_-z/\lambda)]. \tag{32b}$$

Here

$$\alpha/\alpha'=\hat{\gamma}/\hat{\gamma}' \tag{33}$$

and t is time and f the frequency of the wave. Thus the noraml modes in the composite material are elliptically polarized as in a biaxial crystal,[12] differing only in that $\alpha/\alpha'\neq 1$ in the former, while $\alpha/\alpha'=1$ in the latter. The optical rotation angle obtained after the wave has passed through the material is quite small, as in the biaxial crystal.[12]

§4. Discussion

We can describe the propagation of an electromagnetic wave in a composite material in terms of the effective dielectric tensor, as long as the dimension of the structure, d, is much smaller than the wavelength of the wave in the material. Quantitatively, this condition is expressed by[5]

$$kd|n|\ll 1. \tag{34}$$

Here, $k=2\pi/\lambda$ is the wave number is vacuum and n is the

effective index of refraction, which differs for different propagation directions and for different polarization directions: when eq. (34) holds, the electromagnetic fields change very slightly in a distance of order d along an arbitrary direction of the propagation, so that the effective fields and, therefore, the effective dielectric tensor, have significance.[5]

We have derived the effective tensor on the assumption that ε_1 and ε_2 are real numbers. However, since we have treated only linear relations between the fields, ε_1 and ε_2 can be complex (i.e. the submaterials are conducting),[15] as long as eq. (34) holds. When this inequality holds, the skin effect in the conducting submaterial is negligible.[5,15]

In practice, we can show that the condition under which the effective dielectric tensor is applicable is relaxed from that given by eq. (34). By solving the potential boundary problem rigorously in a complex medium composed of stratified thin layers, Rytov[5] has derived the effective dielectric tensor for the medium as

$$\hat{\varepsilon}_{//}=\hat{\varepsilon}_x[1+O(k^2d^2)] \tag{35a}$$

$$\hat{\varepsilon}_{\perp}=\hat{\varepsilon}_z[1+O(k^2d^2)]. \tag{35b}$$

Here $\hat{\varepsilon}_{//}$ and $\hat{\varepsilon}_{\perp}$ are the effective dielectric constants for the wave propagation with polarization parallel (//) and perpendicular ($\perp$) to the layer, and $\hat{\varepsilon}_x$ and $\hat{\varepsilon}_z$ are those given by eq. (24). Equation (35) means that our effective dielectric constant deviates from the strict one to a degree of $O(k^2d^2)$. Thus the condition under which our effective dielectric constant for the composite material is applicable, is given as $|O(k^2d^2)|\ll 1$. This becomes in the respective cases,

(I) Propagating normal to the layers;

$$|O_1|=(R/4)|(\varepsilon_1-\varepsilon_2)/[(1-f)\varepsilon_1+f\varepsilon_2]^{1/2}|\ll 1. \tag{36a}$$

(II) Propagating along the layers with polarization along the layers;

$$|O_2|=(R^2/12)|(\varepsilon_1-\varepsilon_2)^2/[(1-f)\varepsilon_1+f\varepsilon_2]|\ll 1. \tag{36b}$$

(III) Propagating along the layers with polarization normal to the layers;

$$|O_3|=(R^2/12)|P^2(\varepsilon_1-\varepsilon_2)^2/[(1-f)\varepsilon_1+f\varepsilon_2]|\ll 1. \tag{36c}$$

Here

$$P=[(1-f)\varepsilon_1+f\varepsilon_2]/[f\varepsilon_1+(1-f)\varepsilon_2],$$
$$R=kAB/d,\ f=B/(A+B),\ d=A+B, \tag{37}$$

and A and B are the thicknesses of the nonmagnetic and magnetic layers, respectively (Fig. 2). The values of $|O_1|$, $|O_2|$, and $|O_3|$ give the degree of deviation of the effective dielectric constants $\hat{\varepsilon}_{//}$ and $\hat{\varepsilon}_{\perp}$ from $\hat{\varepsilon}_x$ and $\hat{\varepsilon}_z$, respectively. Let us numerate $|O_1|$, $|O_2|$, and $|O_3|$ for stratified layers of CdS and Co and a thickness of $A=B=100$ Å, for example. Using the dielectric constants $\varepsilon_1=2.5$[16] and $\varepsilon_2=-12.4+8.4i$[17] at $\lambda=0.63\ \mu$m, we have $|O_1|=0.11$ and $|O_2|=|O_3|=0.015$. Thus the effective dielectric constants calculated in the respective cases contain errors of 11% and 1.5%.

§5. Conclusions

We have derived the effective dielectric tensor, including the off-diagonal elements, for a composite material containing fine magnetic particles or thin layers dispersed in a nonmagnetic matrix. The diagonal element $\hat{\varepsilon}_j$ of the effective tensor is independent of the off-diagonal element γ of the magnetic submaterial. The off-diagonal element $\hat{\gamma}$ of the effective tensor is proportional to γ and also to the volume fraction f of the magnetic submaterial.

When the shape of the magnetic submaterial is symmetrical about the magnetization direction, the whole structure behaves as a uniaxial crystal magnetized along the axis of symmetry. However, when the shape is not symmetrical, the off-diagonal element of the effective tensor does not follow the generalized symmetry relation $\varepsilon_{ij}(\boldsymbol{M})=\varepsilon_{ji}(-\boldsymbol{M})$ ($\boldsymbol{M}$: magnetization). In this case, elliptically-polarized normal modes propagate in the magnetization direction.

The criterion for applying the effective tensor to the propagation of an electromagnetic wave is given in general by eq. (34), which is in practice relaxed, as expressed by eq. (36) for stratified layers.

Experimental studies confirming the calculation will be reported elsewhere.

Acknowledgement

The authors would like to thank Prof. N. Goto for fruitful discussions.

Appendix: Electric Field Induced in Magnetic Ellipsoid

Here we derive eq. (10), i.e. the relation between the applied and induced fields, when $\gamma\neq 0$ or the ellipsoid is magnetized.

Substituting eqs. (8) and (9) into eq. (3) and using the relation required from the conservation nature of the field,[13] we have

$$\phi_1=\phi_2. \tag{A·1}$$

Substituting eqs. (5) and (6) into eq. (4), we obtain after rewriting using eqs. (1), (8) and (9),

$$\varepsilon_2\boldsymbol{n}\cdot\nabla\phi_2+i\gamma n_x(\partial\phi_2/\partial y)-i\gamma n_y(\partial\phi_2/\partial x)=\varepsilon_1\boldsymbol{n}\cdot\nabla\phi_1, \tag{A·2}$$

where n_x and n_y (and n_z) are the components of the normal vector $\boldsymbol{n}$.

First, we calculated the x component of the field satisfying the simultaneous equations (A·1) and (A·2) at the ellipsoid surface.

Introducing the ellipsoidal coordinates ξ, η, and ζ on the assumption that

$$c<b<a, \tag{A·3}$$

the potential of the applied field is expressed[13,14] as

$$\phi_{0x}=-F_x x=C_0F_1(\xi)F_2(\eta)F_3(\zeta). \tag{A·4}$$

Here

$$F_1(\xi)=(\xi+a^2)^{1/2},\ F_2(\eta)=(\eta+a^2)^{1/2},\ F_3(\zeta)=(\zeta+a^2)^{1/2} \tag{A·5}$$

$$-c^2<\xi,\ -b^2<\eta<-c^2,\ -a^2<\zeta<-b^2, \tag{A·6}$$

and

$$C_0=-F_x/[(a^2-b^2)(a^2-c^2)]^{1/2} \tag{A·7}$$

is a constant. The potential for the inner field is similarly expressed as

$$\phi_{2x}=-E_{2x}x=C_2F_1(\xi)F_2(\eta)F_3(\zeta), \tag{A·8}$$

where

$$C_2=-E_{2x}/[(a^2-b^2)(a^2-c^2)]^{1/2} \tag{A·9}$$

is a constant. The potential for the outer field should be in the form[13)]

$$\phi_{1x}=-E_{1x}x=[C_0+C_1A_1(\xi)]F_1(\xi)F_2(\eta)F_3(\zeta). \tag{A·10}$$

Here

$$A_1(\xi)=\int_\xi^\infty \frac{dt}{(t+a^2)[(t+a^2)(t+b^2)(t+c^2)]^{1/2}} \tag{A·11}$$

and C_1 is a constant which, together with C_2, should be adjusted to satisfy the boundary condition at the ellipsoid surface.

Substituting eqs. (A·8) and (A·10) into eq. (A·2) leads to

$$C_0+C_1A_1(0)=C_2. \tag{A·12}$$

Since

$$(n\cdot\nabla)_s=\left(\frac{1}{h_1}\frac{\partial}{\partial\xi}\right)_{\xi=0},\quad h_1=\frac{1}{2}\left[\frac{(\xi-\eta)(\xi-\zeta)}{(\xi+a^2)(\xi+b^2)(\xi+c^2)}\right]^{1/2}, \tag{A·13}$$

eq. (A·2) is rewritten as

$$\varepsilon_2\left(\frac{1}{h_1}\frac{\partial\phi_2}{\partial\xi}\right)_{\xi=0}-i\gamma\left(n_y\frac{\partial\phi_2}{\partial x}\right)_s=\varepsilon_1\left(\frac{1}{h_1}\frac{\partial\phi_1}{\partial\xi}\right)_{\xi=0}, \tag{A·14}$$

where s means the values at the surface of the ellipsoid.Substituting eqs. (A·8) and (A·10) into eq. (A·14), we obtain

$$\begin{aligned}&\varepsilon_2bc[F_2(\eta)F_3(\zeta)/(\eta\zeta)^{1/2}]_sC_2+i\gamma(E_{2x})_s\\&=\varepsilon_1(bcC_2-2a^{-1}C_1)[F_2(\eta)F_3(\zeta)/(\eta\zeta)^{1/2}]_s.\end{aligned} \tag{A·15}$$

Here we used eq. (A·12) together with the following equations:

$$\begin{cases}\dfrac{\partial\phi_{2x}}{\partial x}=-E_{2x},\quad \left(\dfrac{1}{h_1}\right)_{\xi=0}=\dfrac{2abc}{(\sqrt{\eta\zeta})_s},\quad \left(\dfrac{\partial A_1(\xi)}{\partial\xi}\right)_{\xi=0}=\dfrac{-1}{a^3bc},\\ F_1(0)=a,\quad \left(\dfrac{\partial F_1}{\partial\xi}\right)_{\xi=0}=(2a)^{-1}.\end{cases} \tag{A·16}$$

Using eq. (A·12) again in eq. (A·15), we have

$$\begin{aligned}&[1+(\varepsilon_2-\varepsilon_1)\varepsilon_1^{-1}N_x]C_2\\&=C_0-\left(\frac{i\gamma}{\varepsilon_1}\right)N_xn_x(E_{2x})_s(bc)^{-1}\left[\frac{\sqrt{\eta\zeta}}{F_2(\eta)F_3(\zeta)}\right]_s\end{aligned} \tag{A·17}$$

where

$$N_x=abcA_1(0)/2 \tag{A·18}$$

stands for the depolarization factor of the ellipsoid in the x direction.[13)]

Considering eqs. (A·4) and (A·8), we can rewrite eq. (A·17) as

$$\begin{aligned}F_x=&[1+(\varepsilon_2-\varepsilon_1)\varepsilon_1^{-1}N_x]E_{2x}-(i\gamma/\varepsilon_1)N_x(E_{2x})_s(bc)^{-1}\\&\times F_1(\xi)F_2(\eta)F_3(\zeta)x^{-1}\left[\frac{\sqrt{\eta\zeta}}{F_2(\eta)F_3(\zeta)}\right]_s.\end{aligned} \tag{A·19}$$

This is further rewritten as*

$$F_x=[1+(\varepsilon_2-\varepsilon_1)\varepsilon_1^{-1}N_x]E_{2x}\{1-(i\gamma/\varepsilon_1)X\}. \tag{A·20}$$

Here the quantity X is given by

$$X=N_1[1+(\varepsilon_2-\varepsilon_1)\varepsilon_1^{-1}N_x]^{-1}\cdot\frac{an_x}{(x)_s}\cdot\frac{(E_{2x})_s}{E_{2x}}\cdot\frac{[\sqrt{\eta\zeta}]_s}{bc}, \tag{A·21}$$

and we can show X to be negligibly small as follows: since $E_{2x}=(E_{2x})_s$ (i.e. the inner field is constant), if $\gamma=0$, we have

$$(E_{2x})_s/E_{2x}\doteqdot 1, \tag{A·22}$$

as long as eq. (2) holds. Further, we have the relations

$$0\leqq N_x\leqq 1 \tag{A·23}$$

and

$$|1+(\varepsilon_1-\varepsilon_2)\varepsilon_1^{-1}N_x|\approx 1 \quad \text{(of the same order as 1)} \tag{A·24}$$

and we can obtain the relations

$$|an_x/(x)_s|=(a^2n_x^2+b^2n_y^2+c^2n_z^2)^{1/2}/a<1 \tag{A·25}$$

$$|[(\eta\zeta)^{1/2}]_s/(bc)|<1, \tag{A·26}$$

from eqs. (A·3) and (A·6). Combining eqs. (A·21)~(A·26) gives

$$|X|\ll 1. \tag{A·27}$$

When the order of the lengths a, b and c differs from that given in eq. (A·3), i.e. a, b and c in eq. (A·3) are permuted, we get the similar relation as eq. (A·26). Therefore, eq. (A·27) holds independent of the order of the radius, so that eq. (A·20) becomes

$$F_x=[1+(\varepsilon_2-\varepsilon_1)\varepsilon_1^{-1}N_x]E_{2x} \tag{A·28}$$

provided $|\gamma/\varepsilon_2|\ll 1$ (eq. (2)). Since we get similar results for the y and the z components, we have eq. (10). Even when the ellipsoid reduces to a spheroid ($a=b$, $b=c$, or $c=a$) or a sphere ($a=b=c$), we can obtain a similar result using spheroidal or spherical coordinates.[13,14)]

References

1) I. K. Sculler and M. Crimsditch: J. Appl. Phys. **55** (1984) 2491.
2) H. K. Wong, H. Q. Yang, B. Y. Jin, Y. H. Shen, W. Z. Cao and J. B. Ketterson: J. Appl. Phys. **55** (1984) 2494.
3) J. van Suchtelen: Philips Res. Rep. **27** (1972) 28.
4) F. Tanaka and N. Imamura: J. Magn. & Magn. Mater. **35** (1983) 173.
5) S. M. Rytov: Sov. Phys. JETP **2** (1956) 466.
6) M. Born and E. Wolf: *Principles of Optics* (Pergamon, New York, 1980) 6th ed., p. 705.
7) W. L. Bragg and A. B. Pippard: Acta Cryst. **6** (1953) 865.
8) J. P. van der Ziel, M. Ilegems and R. M. Miknlyak: Appl. Phys. Lett. **28** (1976) 735.
9) S. Taketomi: Jpn. J. Appl. Phys. **22** (1983) 1137.
10) K. Hubber: J. Colloid Sci. **3** (1948) S. 197.

*The relations $F_1(\xi)F_2(\eta)F_3(\zeta)x^{-1}=[(a^2-b^2)(a^2-c^2)]^{1/2}$ and $[1/(F_2(\eta)F_3(\zeta))]_s=F_1(0)(x)_s^{-1}[(a^2-b^2)(a^2-c^2)]^{-1/2}$ are used.

11) J. C. Suits: IEEE. Trans. Magn. **MAG-8** (1972) 95.
12) W. J. Tabor and F. S. Chen: J. Appl. Phys. **40** (1969) 2760.
13) J. A. Stratton: *Electromagnetic Theory* (McGraw-Hill, New York, 1941) Chap. III.
14) L. D. Landau and E. M. Lifshitz: *Electrodynamics of Continuous Media* (Pergamon, Oxford, 1960) Chap. I.
15) M. Born and E. Wolf: *Principles of Optics* (Pergamon, New York, 1980) 6th ed., p. 615.
16) T. M. Bleniewski and S. J. Czyzak: J. Opt. Soc. Am. **53** (1963) 496.
17) P. B. Johnson and R. W. Christy: Phys. Rev. **B9** (1974) 5056.