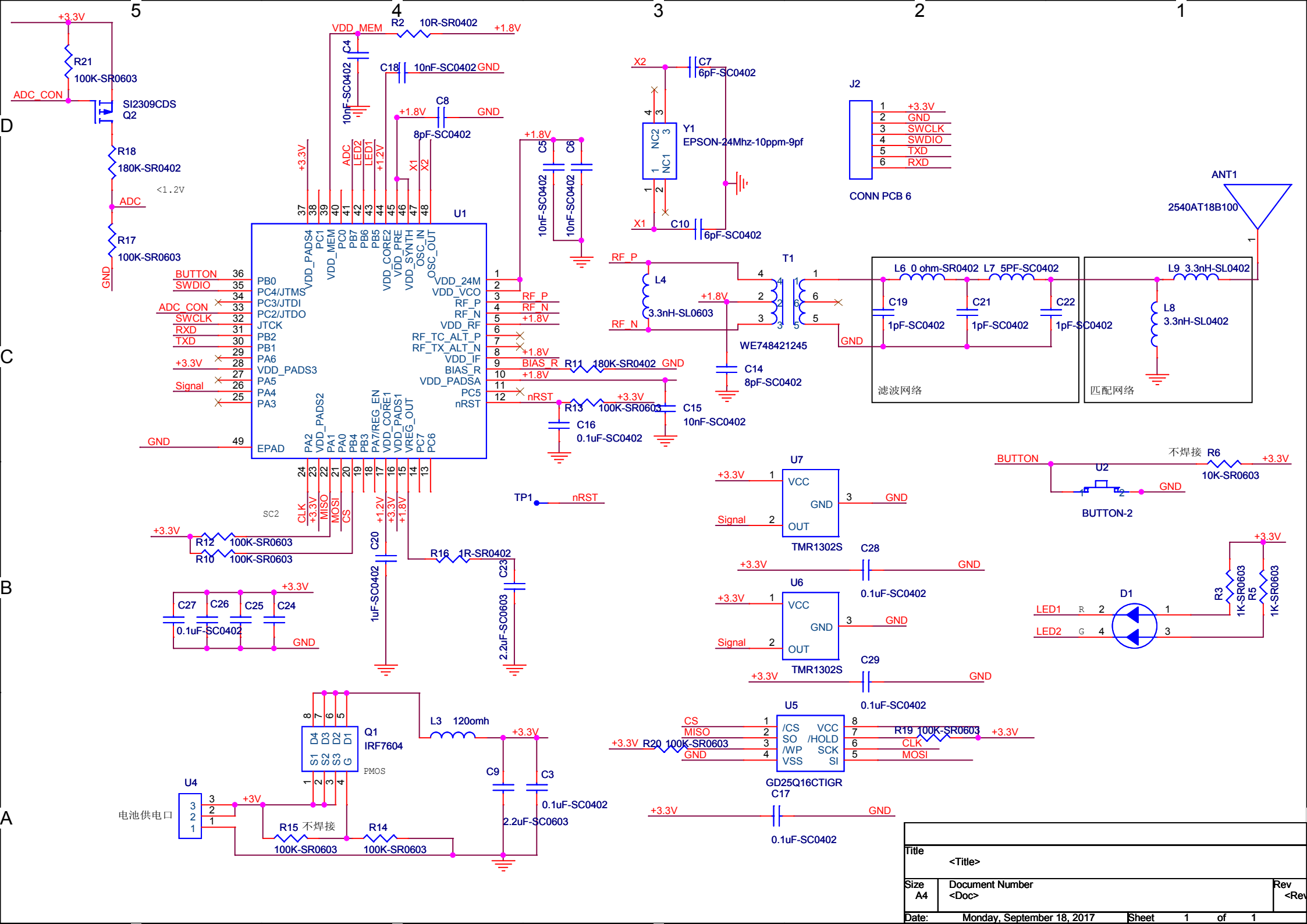

Title	<Title>	
Size A4	Document Number <Doc>	Rev <Rev
Date: Monday, September 18, 2017	Sheet 1 of 1	