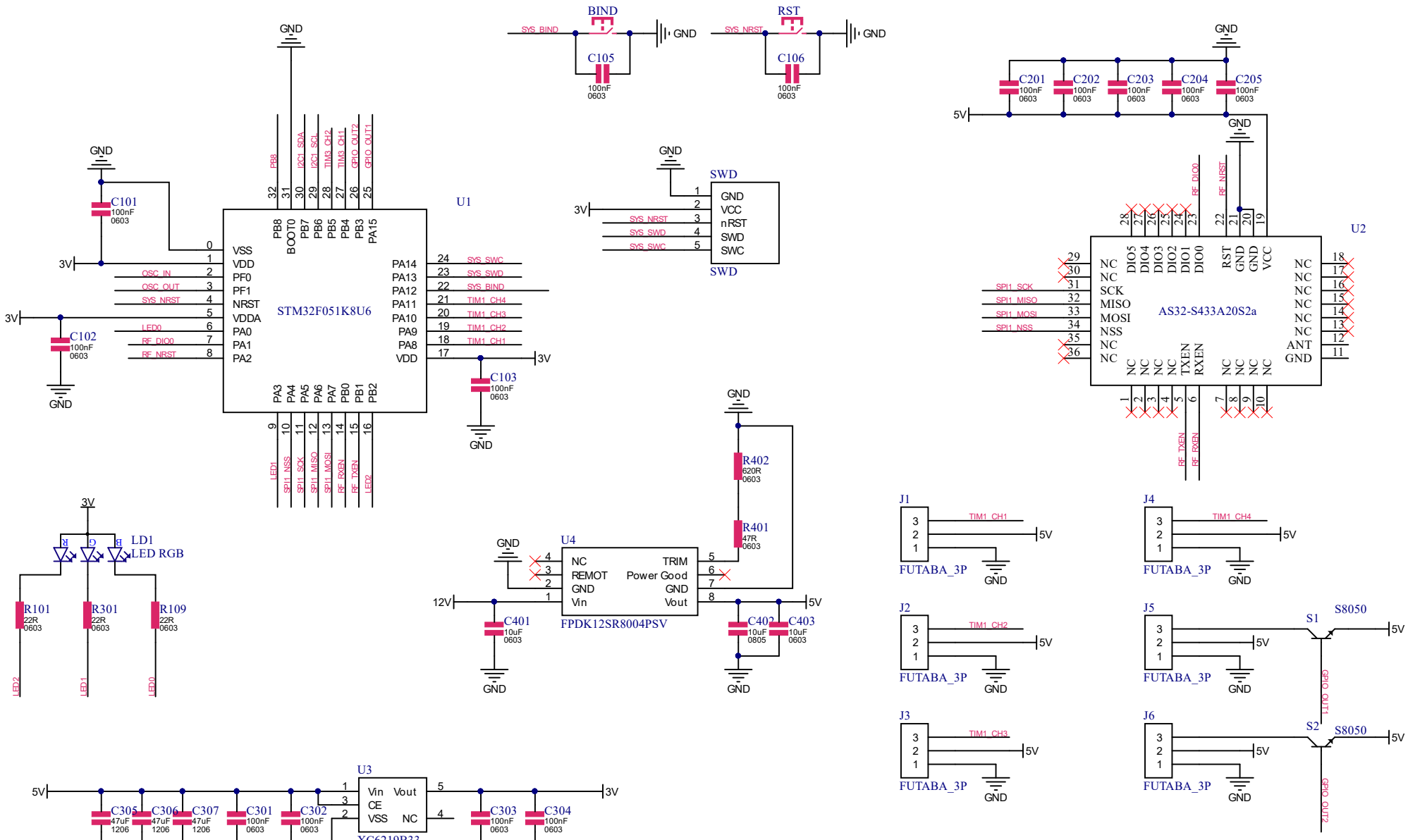

ME6211C33: 500mA Out Max ; Input 6V Max.

XC6219B33: 500mA Out Max ; Input 7V Max.

SP6205EM5: 500mA Out Max ; Input 6V Max.