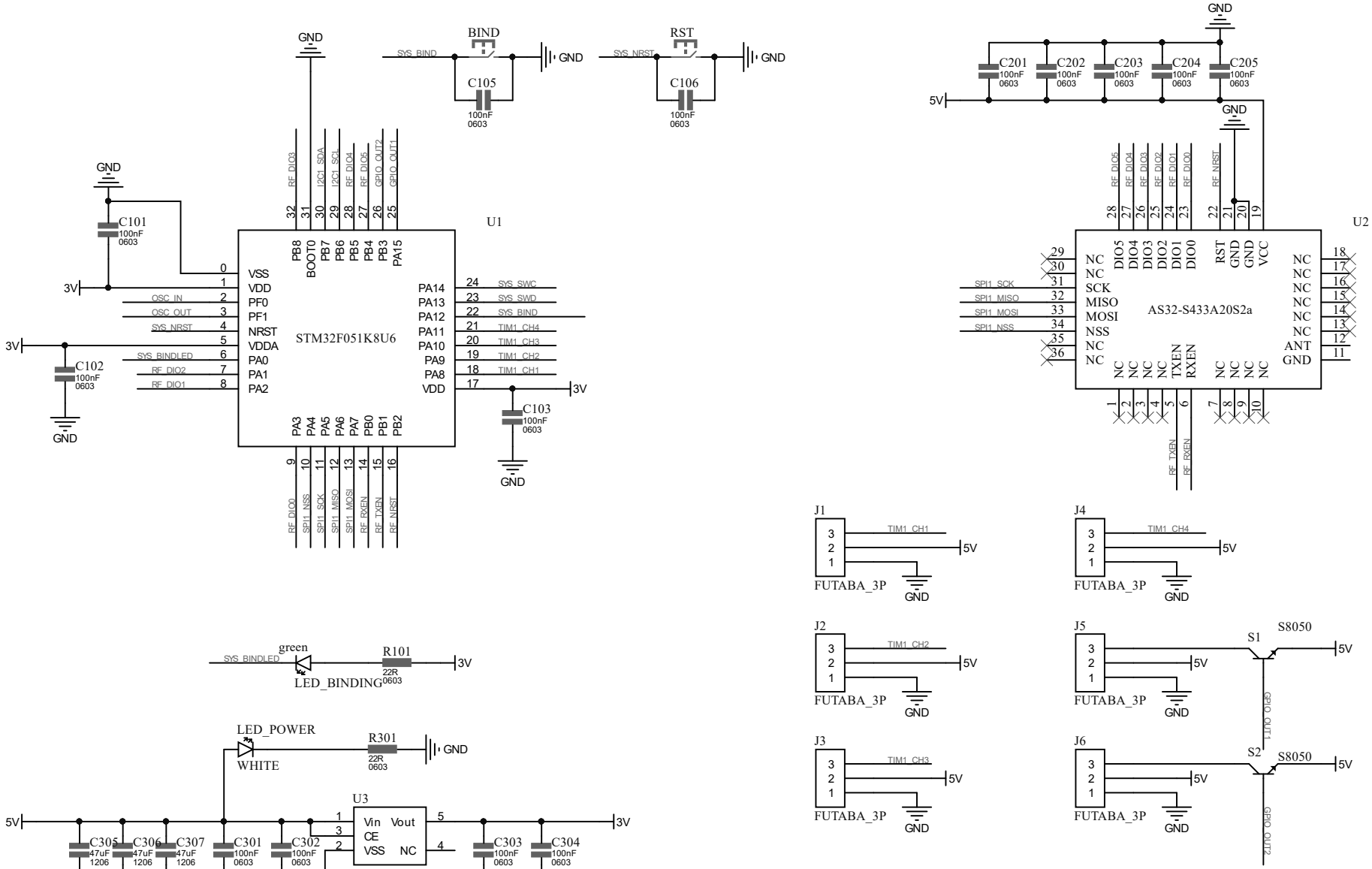

PA9 USART1_TRX Halfduplex