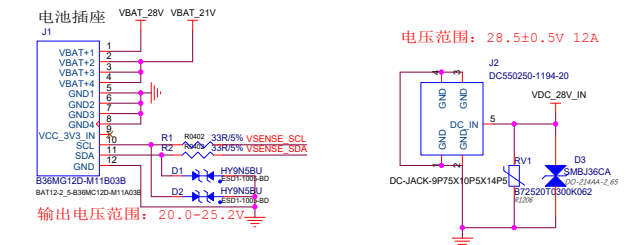
电池插座
J1
VBAT_28V VBAT_21V
VBAT+1
VBAT+2
VBAT+3
VBAT+4
GND1
GND2
GND3
GND4
VCC_3V3_IN
SCL
SDA
GND
336MG12D-M1B03B
BAT12-2_5-B36MC12D-M11A03B
R1 R0402 33R/5% VSENSE_SCL
R2 R0402 33R/5% VSENSE_SDA
D1 HY9N5BU ESD1-1005-BD
D2 HY9N5BU ESD1-1005-BD
输出电压范围：20.0-25.2V

电压范围：28.5±0.5V 12A
J2
DC550250-1194-20
GND
DC_IN
VDC_28V_IN
RV1
D3
SMBJ36CA
DO-214AA-2_65
DC-JACK-9P75X10P5X14P5
B72520T0300K062
R1206

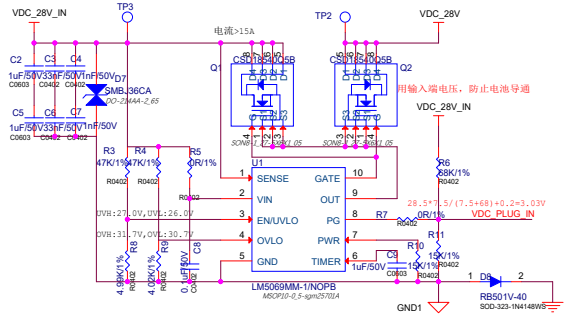
VDC_28V_IN
TP3
电流>15A
TP2
VDC_28V
C2 C3 C4
1uF/50V 33nF/50V 1nF/50V
D7
SMBJ36CA
DO-214AA-2_65
C5 C6 C7
Q1
CSD18540Q5B
Q2
用输入端电压，防止电池导通
VDC_28V_IN
R3 47K/1%
R4 47K/1%
R5 0R/1%
R6 68K/1%
U1
SENSE
VIN
EN/UVLO
OVLO
GND
GATE
OUT
PG
PWR
TIMER
UVR:27.0V,UVL:26.0V
OVR:31.7V,OVL:30.7V
28.5*7.5/(7.5+68)+0.2=3.03V
R7 0R/1%
VDC_PLUG_IN
R10 15K/1%
R11 15K/1%
C9 1uF/50V
D8
RB501V-40
SOD-323-1N4148WS
LM5069MM-1/NOPB
MSOP10-0_5-sgm25701A
GND1

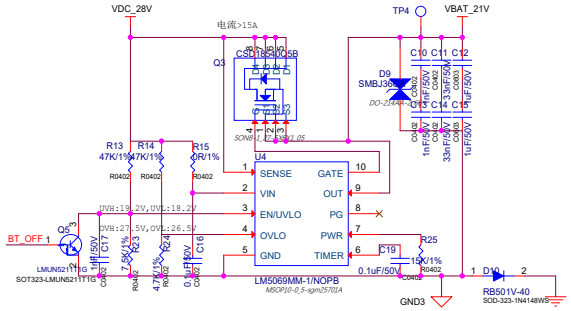
VDC_28V
电流>15A
TP4
VBAT_21V
Q3
CSD18540Q5B
D9
SMBJ36CA
DO-214AA-2_65
C10 C11 C12
C13 C14 C15
R13 47K/1%
R14 47K/1%
R15 0R/1%
U4
SENSE
VIN
EN/UVLO
OVLO
GND
GATE
OUT
PG
PWR
TIMER
UVR:19.2V,UVL:18.2V
OVR:27.5V,OVL:26.5V
BT_OFF
Q5
LMUN5211T1G
SOT323-LMUN5211T1G
R25 15K/1%
C19 0.1uF/50V
D10
RB501V-40
SOD-323-1N4148WS
LM5069MM-1/NOPB
MSOP10-0_5-sgm25701A
GND3

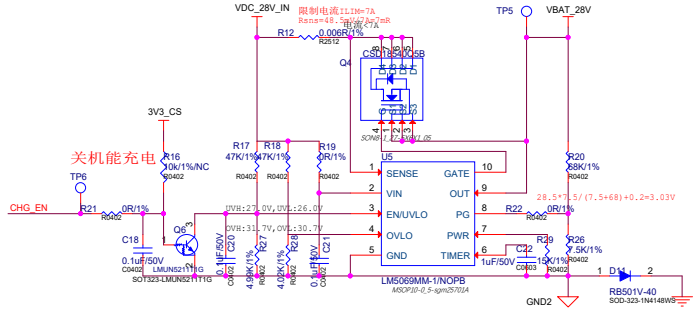
VDC_28V_IN
限制电流ILIM=7A
Rsns=48.7mΩ
电流>7A
R12 0.006R/0.5%
TP5
VBAT_28V
Q4
CSD18540Q5B
3V3_CS
关机能充电
TP6
CHG_EN
R21 0R/1%
R16 10k/1%/NC
R17 47K/1%
R18 47K/1%
R19 0R/1%
U5
SENSE
VIN
EN/UVLO
OVLO
GND
GATE
OUT
PG
PWR
TIMER
UVR:27.0V,UVL:26.0V
OVR:31.7V,OVL:30.7V
28.5*7.5/(7.5+68)+0.2=3.03V
R20 68K/1%
R22 0R/1%
R26 7.5K/1%
R29 15K/1%
C22 1uF/50V
D14
RB501V-40
SOD-323-1N4148WS
LM5069MM-1/NOPB
MSOP10-0_5-sgm25701A
GND2

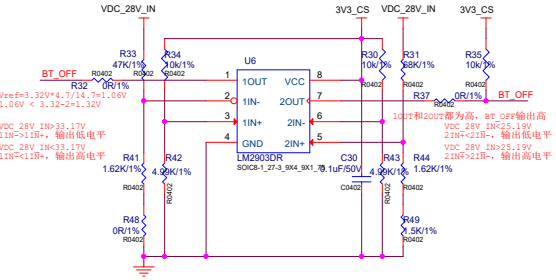
VDC_28V_IN
3V3_CS
VDC_28V_IN
3V3_CS
BT_OFF
R33 47K/1%
R34 10k/1%
R32 0R/1%
U6
1OUT
1IN-
1IN+
GND
VCC
2OUT
2IN-
2IN+
LM2903DR
SOIC8-1_27-3_9X4_9X1_75
R30 10k/1%
R31 68K/1%
R35 10k/1%
R37 0R/1%
BT_OFF
1OUT和2OUT都为高，BT_OFF输出高
VDC_28V_IN<25.3V
2IN+<2IN-，输出低电平
VDC_28V_IN>25.19V
2IN+>2IN-，输出高电平
Vref=3.32V*4.7/14.7=1.06V
1.06V < 3.32-2*1.32V
VDC_28V_IND>33.17V
1IN->1IN+，输出低电平
VDC_28V_IN<33.17V
1IN-<1IN+，输出高电平
R41 1.62K/1%
R42 4.99K/1%
R48 0R/1%
C30 0.1uF/50V
R43 4.99K/1%
R44 1.62K/1%
R49 1.5K/1%

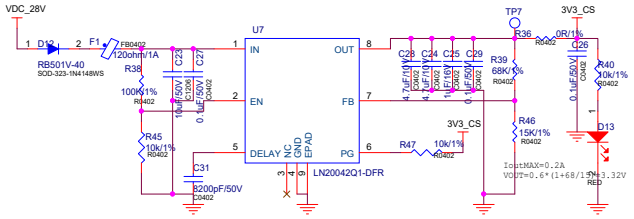
VDC_28V
D12
RB501V-40
SOD-323-1N4148WS
F1
FB0402
120ohm/1A
R38 100K/1%
R45 10k/1%
C31 8200pF/50V
U7
IN
EN
DELAY
OUT
FB
PG
NC
GND
EPAD
LN20042Q1-DFR
R47 10k/1%
TP7
3V3_CS
R36 0R/1%
R39 68K/1%
R46 15K/1%
C26 0.1uF/50V
R40 10k/1%
D13
RED
IoutMAX=0.2A
VOUT=0.6*(1+68/15)=3.32V

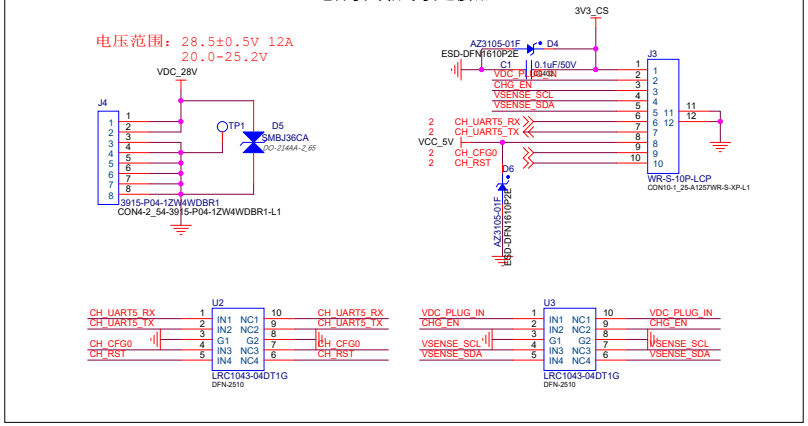
电源板与信号板连接器
电压范围：28.5±0.5V 12A
20.0-25.2V
VDC_28V
J4
TP1
D5
SMBJ36CA
DO-214AA-2_65
3915-P04-1ZW4WDBR1
CON4-2_54-3915-P04-1ZW4WDBR1-L1
3V3_CS
AZ3105-01F
ESD-DFN1610P2E
D4
C1 0.1uF/50V
VDC_PLUG_IN
CHG_EN
VSENSE_SCL
VSENSE_SDA
CH_UART5_RX
CH_UART5_TX
VCC_5V
CH_CFG0
CH_RST
D6
J3
WR-S-10P-LCP
CON10-1_25-A1257WR-S-XP-L1
U2
IN1 NC1
IN2 NC2
G1 G2
IN3 NC3
IN4 NC4
LRC1043-04DT1G
DFN-2510
U3
VDC_PLUG_IN
CHG_EN
VSENSE_SCL
VSENSE_SDA
CH_UART5_RX
CH_UART5_TX
CH_CFG0
CH_RST

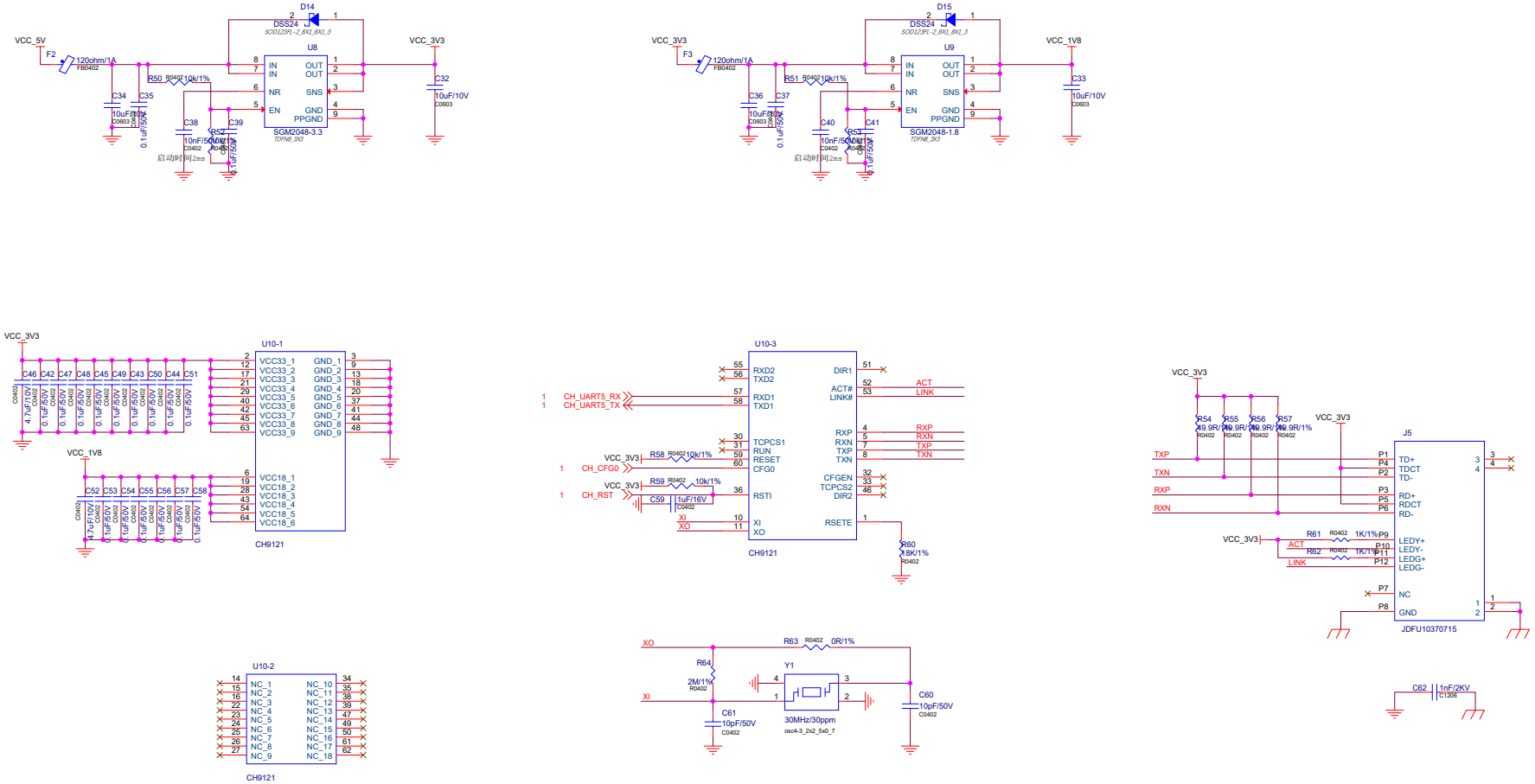

<Core Design>

Title	<Title> SPS100_PWR_T1	
Size C	Document Number <Doc>	Rev T1
Date: Tuesday, June 20, 2023	Sheet 2 of 2	