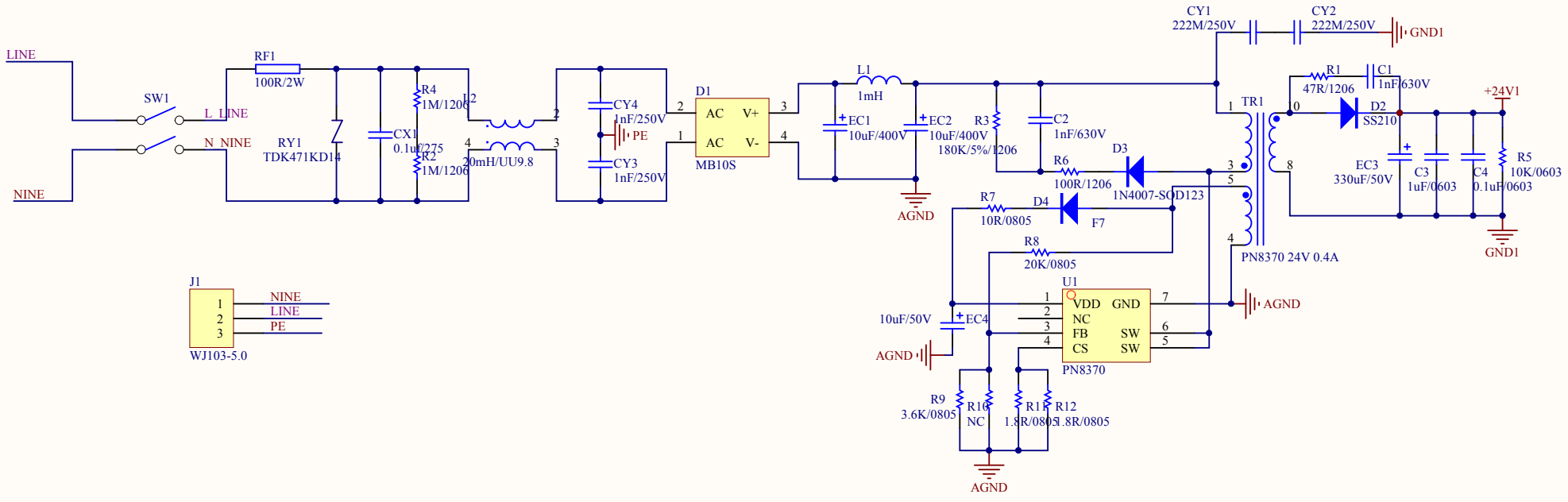

Title		
Size A4	Number	Revision
Date: 2020-6-16		Sheet of
File: H:\2020Project\..\220V-12V Power_Interface.SchDoc		Drawn By: