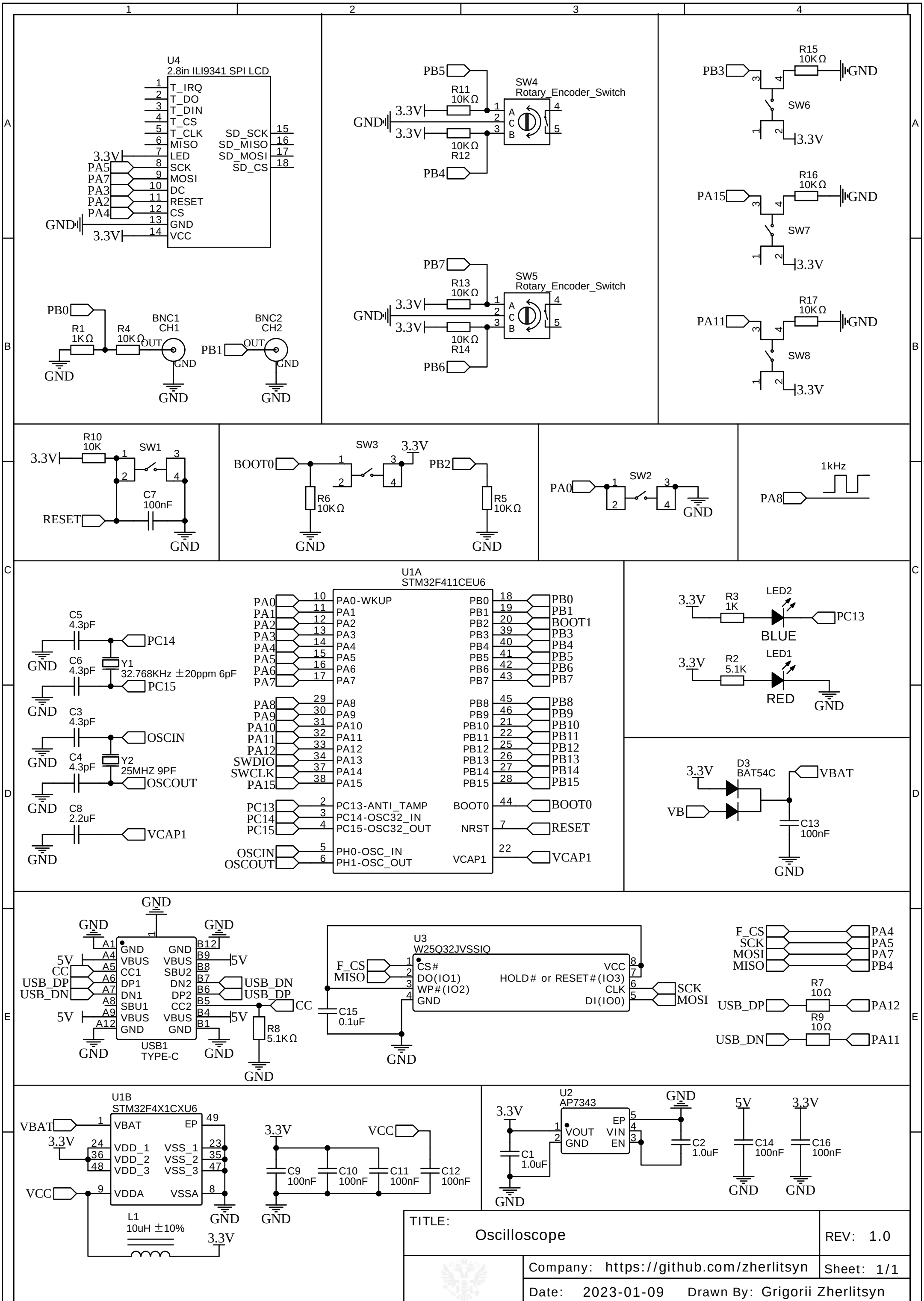
U4
2.8in ILI9341 SPI LCD
T_IRQ
T_DO
T_DIN
T_CS
T_CLK
MISO
LED
SCK
MOSI
DC
RESET
CS
GND
VCC
SD_SCK
SD_MISO
SD_MOSI
SD_CS
PB0
R1 1KΩ
R4 10KΩ
BNC1 CH1
OUT
GND
PB1
BNC2 CH2
PB5
R11 10KΩ
SW4 Rotary_Encoder_Switch
R12 10KΩ
PB4
PB7
R13 10KΩ
SW5 Rotary_Encoder_Switch
R14 10KΩ
PB6
PB3
R15 10KΩ
SW6
PA15
R16 10KΩ
SW7
PA11
R17 10KΩ
SW8
R10 10K
SW1
C7 100nF
RESET
BOOT0
SW3
R6 10KΩ
PB2
R5 10KΩ
PA0
SW2
PA8
1kHz
U1A
STM32F411CEU6
C5 4.3pF
PC14
C6 4.3pF
Y1 32.768KHz ±20ppm 6pF
PC15
C3 4.3pF
OSCIN
C4 4.3pF
Y2 25MHZ 9PF
OSCOUT
C8 2.2uF
VCAP1
PA0-WKUP
PC13-ANTI_TAMP
PC14-OSC32_IN
PC15-OSC32_OUT
PH0-OSC_IN
PH1-OSC_OUT
SWDIO
SWCLK
BOOT1
R3 1K
LED2
BLUE
R2 5.1K
LED1
RED
D3 BAT54C
VBAT
C13 100nF
USB1 TYPE-C
R8 5.1KΩ
U3
W25Q32JVSSIQ
CS#
DO(IO1)
WP#(IO2)
HOLD# or RESET#(IO3)
DI(IO0)
C15 0.1uF
F_CS
SCK
MOSI
MISO
R7 10Ω
R9 10Ω
U1B
STM32F4X1CXU6
L1 10uH ±10%
C9 100nF
C10 100nF
C11 100nF
C12 100nF
U2
AP7343
VOUT
VIN
EN
C1 1.0uF
C2 1.0uF
C14 100nF
C16 100nF
TITLE:
Oscilloscope
REV: 1.0
Company: https://github.com/zherlitsyn
Sheet: 1/1
Date: 2023-01-09
Drawn By: Grigorii Zherlitsyn