INDEXES VS. FILTERS

An **index** data structure of a subset of a table's attributes that are organized and/or sorted to the location of specific tuples using those attributes.
→ Example: B+Tree

A **filter** is a data structure that answers set membership queries; it tells you whether a key (likely) exists in a set but not where it is located.
→ Example: Bloom Filter

TODAY'S AGENDA

Bloom Filters

Skip Lists

Tries / Radix Trees

Inverted Indexes

Vector Indexes

BLOOM FILTERS

Probabilistic data structure (bitmap) that answers set membership queries.

→ False negatives will never occur.
→ False positives can sometimes occur.
→ See Bloom Filter Calculator.

Insert(x):

→ Use *k* hash functions to set bits in the filter to 1.

Lookup(x):

→ Check whether the bits are 1 for each hash function.

BLOOM FILTERS

```
Insert 'RZA'
```

Bloom Filter

0	1	2	3	4	5	6	7
0	0	0	0	1	0	1	0

$hash_1('RZA') = 2222 \% 8 = 6$

$hash_2('RZA') = 4444 \% 8 = 4$

BLOOM FILTERS

Insert 'RZA'

Insert 'GZA'

Bloom Filter

0	1	2	3	4	5	6	7
0	1	0	1	1	0	1	0

$hash_1('GZA') = 5555 \% 8 = 3$

$hash_2('GZA') = 7777 \% 8 = 1$

BLOOM FILTERS

Insert 'RZA'

Insert 'GZA'

Lookup 'RZA' → *TRUE*

Bloom Filter

0	1	2	3	4	5	6	7
0	1	0	1	1	0	1	0

$hash_1('RZA') = 2222 \% 8 = 6$

$hash_2('RZA') = 4444 \% 8 = 4$

BLOOM FILTERS

Insert 'RZA'

Insert 'GZA'

Lookup 'RZA' → *TRUE*

Lookup 'Raekwon' → *FALSE*

Bloom Filter

0	1	2	3	4	5	6	7
0	1	0	1	1	0	1	0

$hash_1(\text{'Raekwon'}) = 3333 \% 8 = 5$

$hash_2(\text{'Raekwon'}) = 8899 \% 8 = 3$

BLOOM FILTERS

Insert 'RZA'

Insert 'GZA'

Lookup 'RZA' → *TRUE*

Lookup 'Raekwon' → *FALSE*

Lookup 'ODB' → *TRUE*

Bloom Filter

0	1	2	3	4	5	6	7
0	1	0	1	1	0	1	0

$hash_1('ODB') = 6699 \% 8 = 3$

$hash_2('ODB') = 9966 \% 8 = 6$

OTHER FILTERS

Counting Bloom Filter

→ Supports dynamically adding and removing keys.
→ Uses integers instead of bits to count the number of occurrences of a key in a set.

OBSERVATION

The easiest way to implement a dynamic order-preserving index is to use a sorted linked list.

All operations have to linear search.
→ Average Cost: **O(n)**

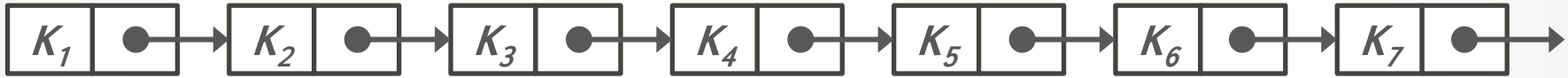

OBSERVATION

The easiest way to implement a dynamic order-preserving index is to use a sorted linked list.

All operations have to linear search.
→ Average Cost: **O(n)**

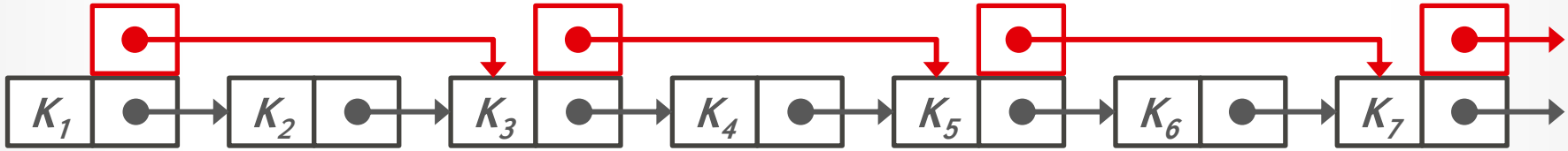

OBSERVATION

The easiest way to implement a dynamic order-preserving index is to use a sorted linked list.

All operations have to linear search.
→ Average Cost: **O(n)**

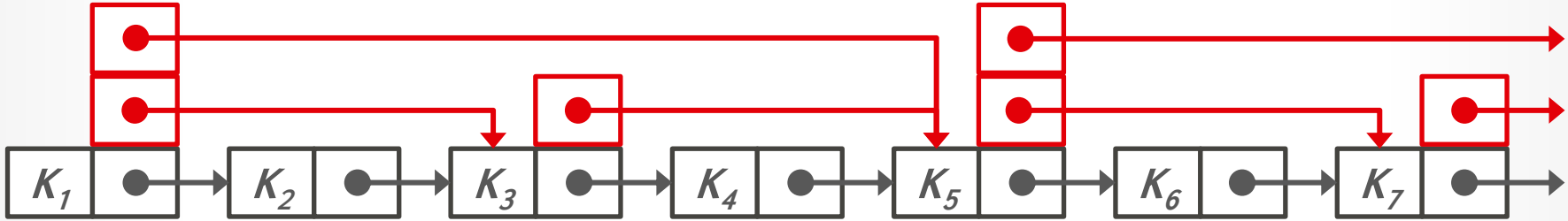

SKIP LISTS

Multiple levels of linked lists with extra pointers to skip over entries.

→ 1st level is a sorted list of all keys.
→ 2nd level links every other key
→ 3rd level links every fourth key
→ Each level has ½ the keys of one below it

Maintains keys in sorted order without requiring global rebalancing.

→ Approximate **O(log n)** search times.

Mostly for in-memory data structures.

→ Example: LSM MemTable

Skip Lists: A Probabilistic Alternative to Balanced Trees

Skip lists are a data structure that can be used in place of balanced trees. Skip lists use probabilistic balancing rather than strictly enforced balancing and as a result the algorithms for insertion and deletion in skip lists are much simpler and significantly faster than equivalent algorithms for balanced trees.

William Pugh

Binary trees can be used for representing abstract data types such as dictionaries and ordered lists. They work well when the elements are inserted in a random order. Some sequences of operations, such as inserting the elements in order, produce degenerate data structures that give very poor performance. If it were possible to randomly permute the list of items to be inserted, trees would work well with high probability for any input sequence. In most cases queries must be answered on-line, so randomly permuting the input is impractical. *Balanced* tree algorithms re-arrange the tree as operations are performed to maintain certain balance conditions and assure good performance.

Skip lists are a probabilistic alternative to balanced trees. Skip lists are balanced by consulting a random number generator. Although skip lists have bad worst-case performance, no input sequence consistently produces the worst-case performance (much like quicksort when the pivot element is chosen randomly). It is very unlikely a skip list data structure will be significantly unbalanced (e.g., for a dictionary of more than 250 elements, the chance that a search will take more than 3 times the expected time is less than one in a million). Skip lists have balance properties similar to that of search trees built by random insertions, yet do not require insertions to be random.

Balancing a data structure probabilistically is easier than explicitly maintaining the balance. For many applications, skip lists are a more natural representation than trees, also leading to simpler algorithms. The simplicity of skip list algorithms makes them easier to implement and provides significant constant factor speed improvements over balanced tree and self-adjusting tree algorithms. Skip lists are also very space efficient. They can easily be configured to require an average of $1\frac{1}{3}$ pointers per element (or even less) and do not require balance or priority information to be stored with each node.

SKIP LISTS

We might need to examine every node of the list when searching a linked list (*Figure 1a*). If the list is stored in sorted order and every other node of the list also has a pointer to the node two ahead it in the list (*Figure 1b*), we have to examine no more than $\lceil n/2 \rceil + 1$ nodes (where n is the length of the list).

Also giving every fourth node a pointer four ahead (*Figure 1c*) requires that no more than $\lceil n/4 \rceil + 2$ nodes be examined. If every (2^i)th node has a pointer 2^i nodes ahead (*Figure 1d*), the number of nodes that must be examined can be reduced to $\lceil \log_2 n \rceil$ while only doubling the number of pointers. This data structure could be used for fast searching, but insertion and deletion would be impractical.

A node that has k forward pointers is called a *level* k node. If every (2^i)th node has a pointer 2^i nodes ahead, then levels of nodes are distributed in a simple pattern: 50% are level 1, 25% are level 2, 12.5% are level 3 and so on. What would happen if the levels of nodes were chosen randomly, but in the same proportions (e.g., as in Figure 1c)? A node's i^{th} forward pointer, instead of pointing 2^{i-1} nodes ahead, points to the next node of level i or higher. Insertions or deletions would require only local modifications; the level of a node, chosen randomly when the node is inserted, need never change. Some arrangements of levels would give poor execution times, but we will see that such arrangements are rare. Because these data structures are linked lists with extra pointers that skip over intermediate nodes, I named them *skip lists*.

SKIP LIST ALGORITHMS

This section gives algorithms to search for, insert and delete elements in a dictionary or symbol table. The *Search* operation returns the contents of the value associated with the desired key or *failure* if the key is not present. The *Insert* operation associates a specified key with a new value (inserting the key if it had not already been present). The *Delete* operation deletes the specified key. It is easy to support additional operations such as "find the minimum key" or "find the next key".

Each element is represented by a node, the level of which is chosen randomly when the node is inserted without regard for the number of elements in the data structure. A *level* i node has i *forward* pointers, indexed 1 through i. We do not need to store the level of a node in the node. Levels are capped at some appropriate constant *MaxLevel*. The *level* of a list is the maximum level currently in the list (or 1 if the list is empty). The *header* of a list has forward pointers at levels one through *MaxLevel*. The forward pointers of the header at levels higher than the current maximum level of the list point to NIL.

SingleStore WIREDTIGER RocksDB Couchbase

SKIP LISTS: INSERT

Insert K_5

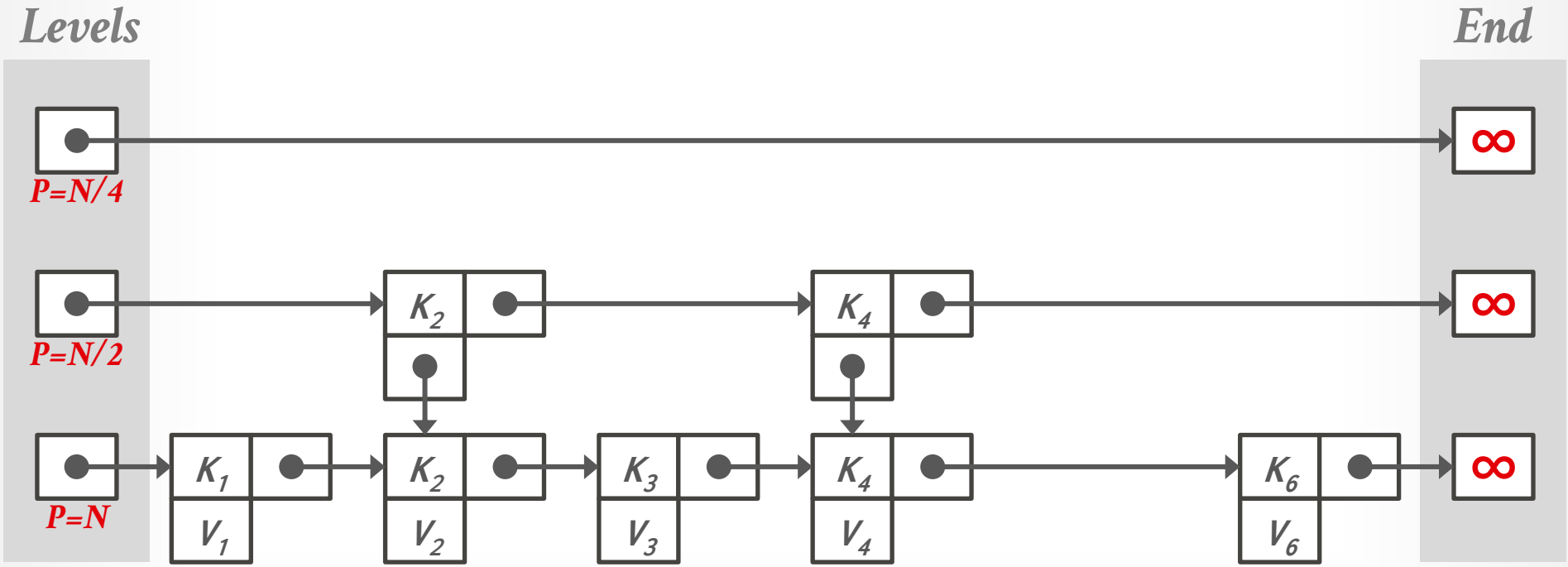

SKIP LISTS: INSERT

Insert K_5

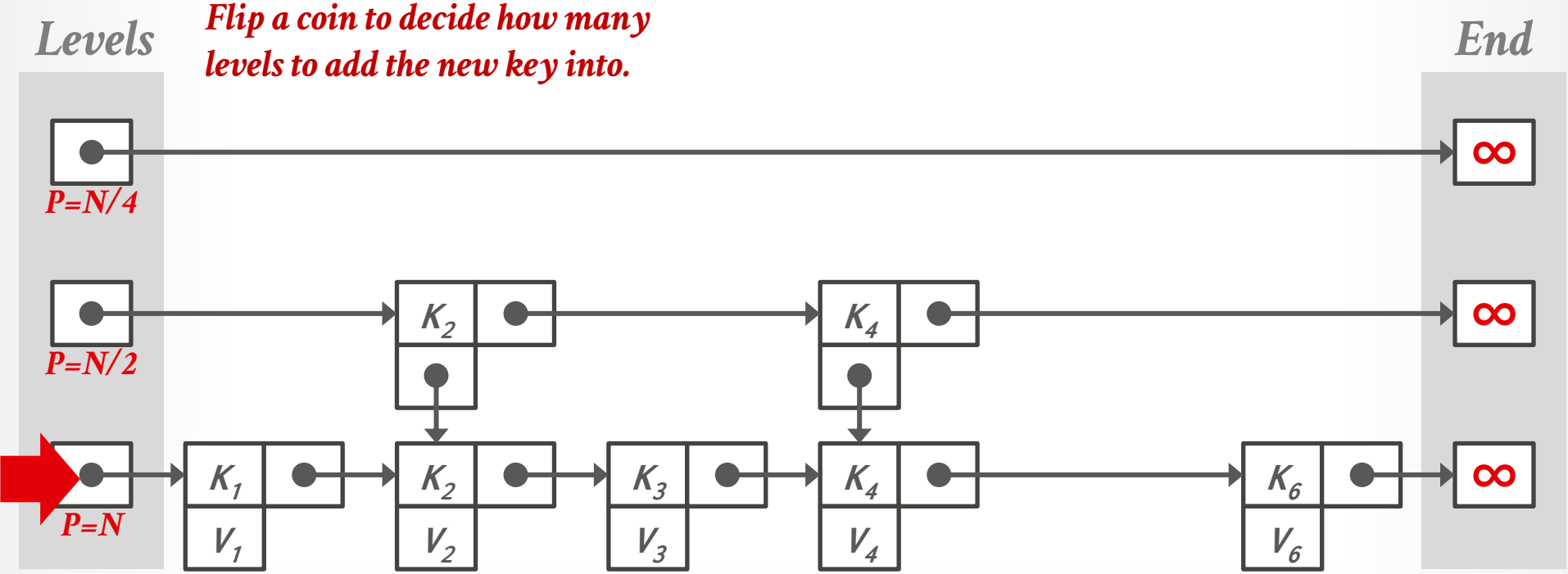

SKIP LISTS: INSERT

Insert K_5

Flip a coin to decide how many levels to add the new key into.

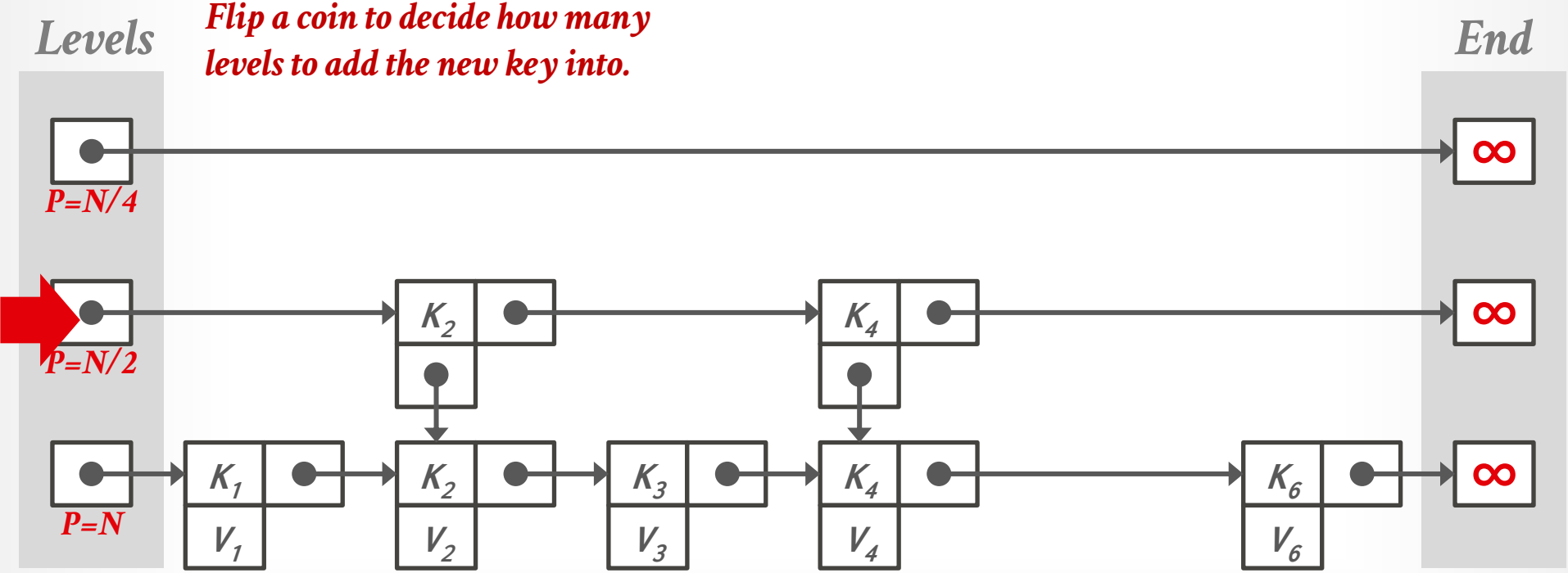

SKIP LISTS: INSERT

Insert K_5

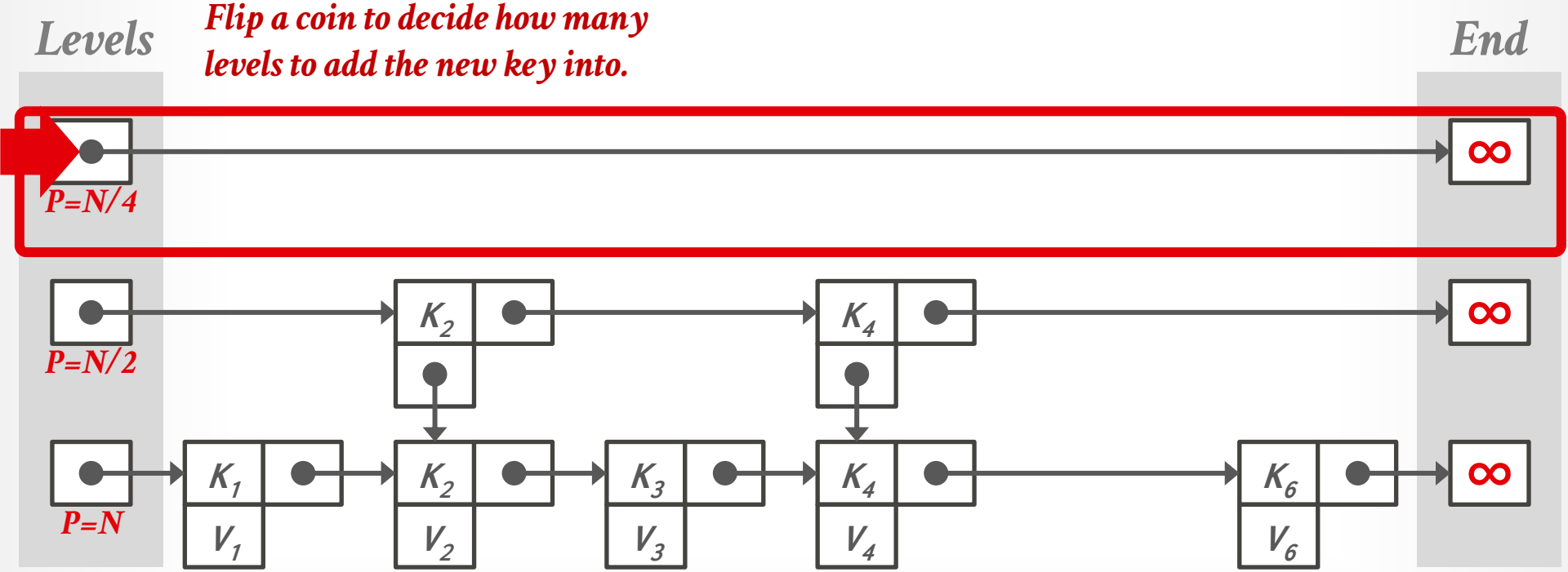

SKIP LISTS: INSERT

Insert K_5

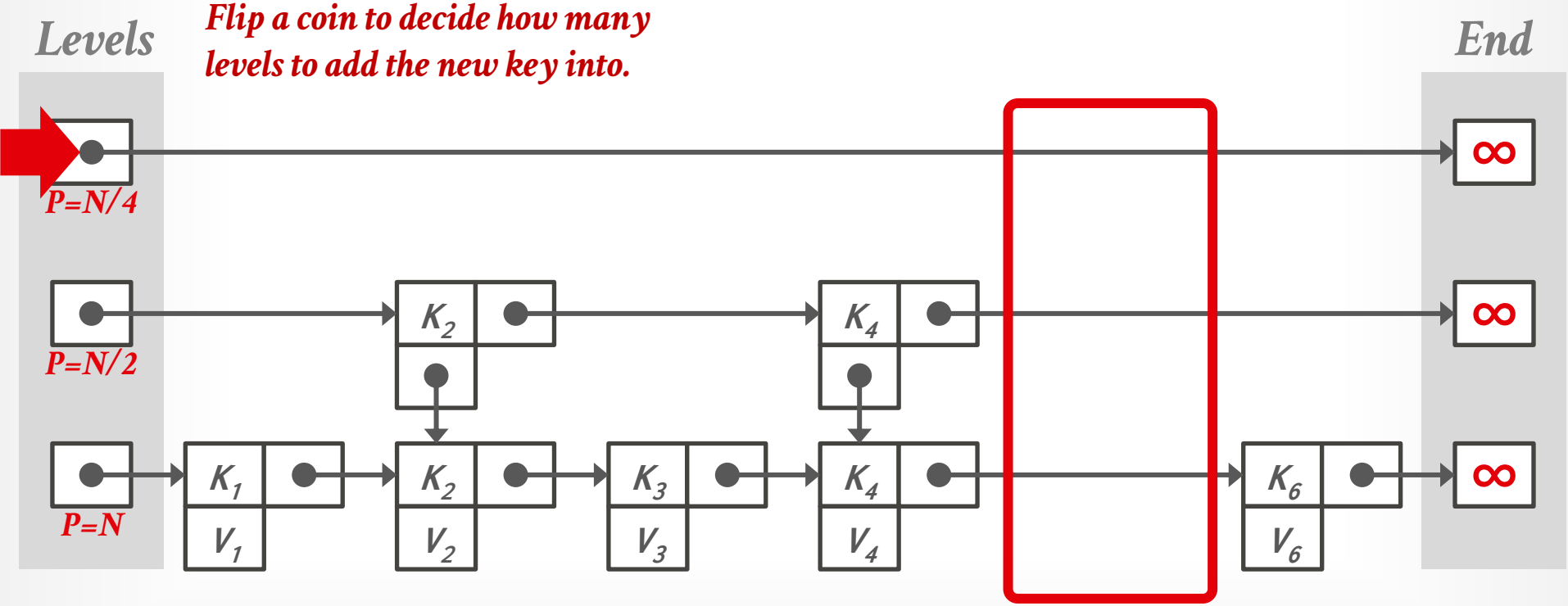

SKIP LISTS: INSERT

Insert K_5

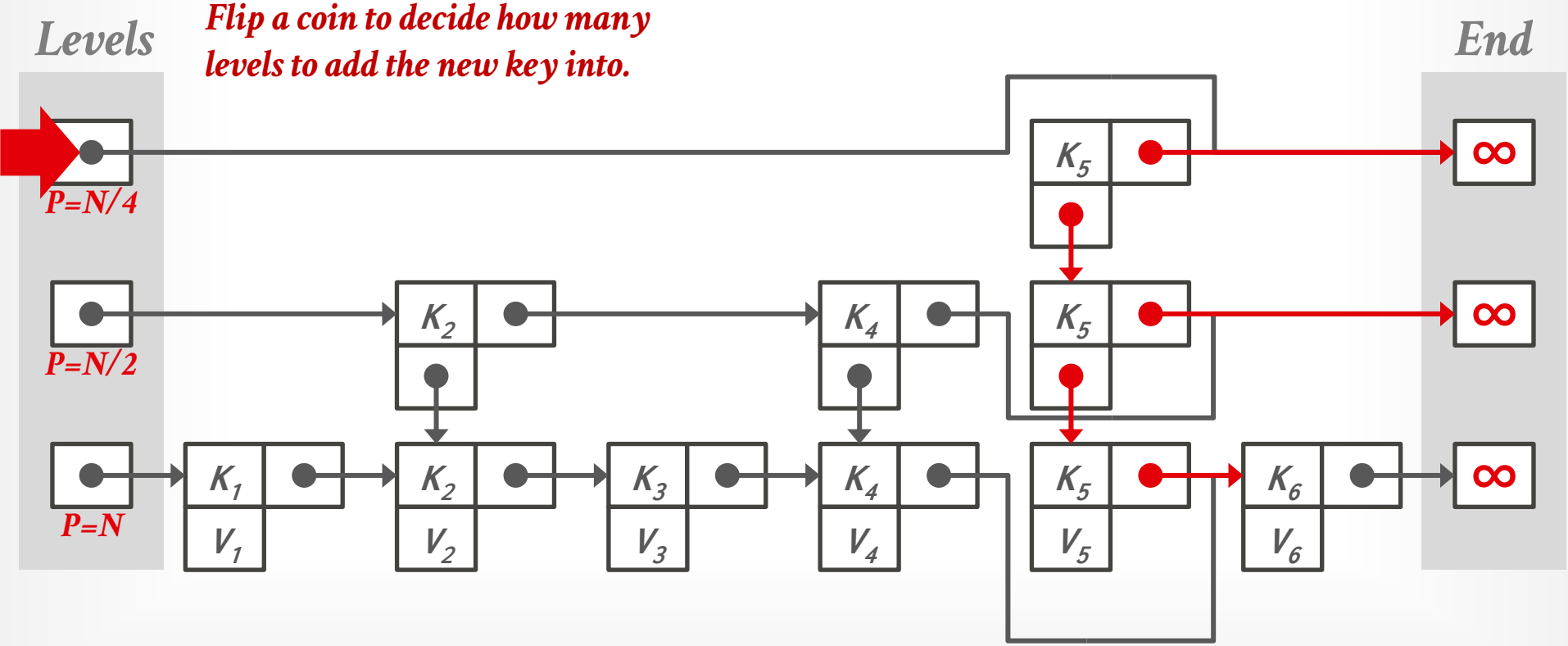

SKIP LISTS: INSERT

Insert K_5

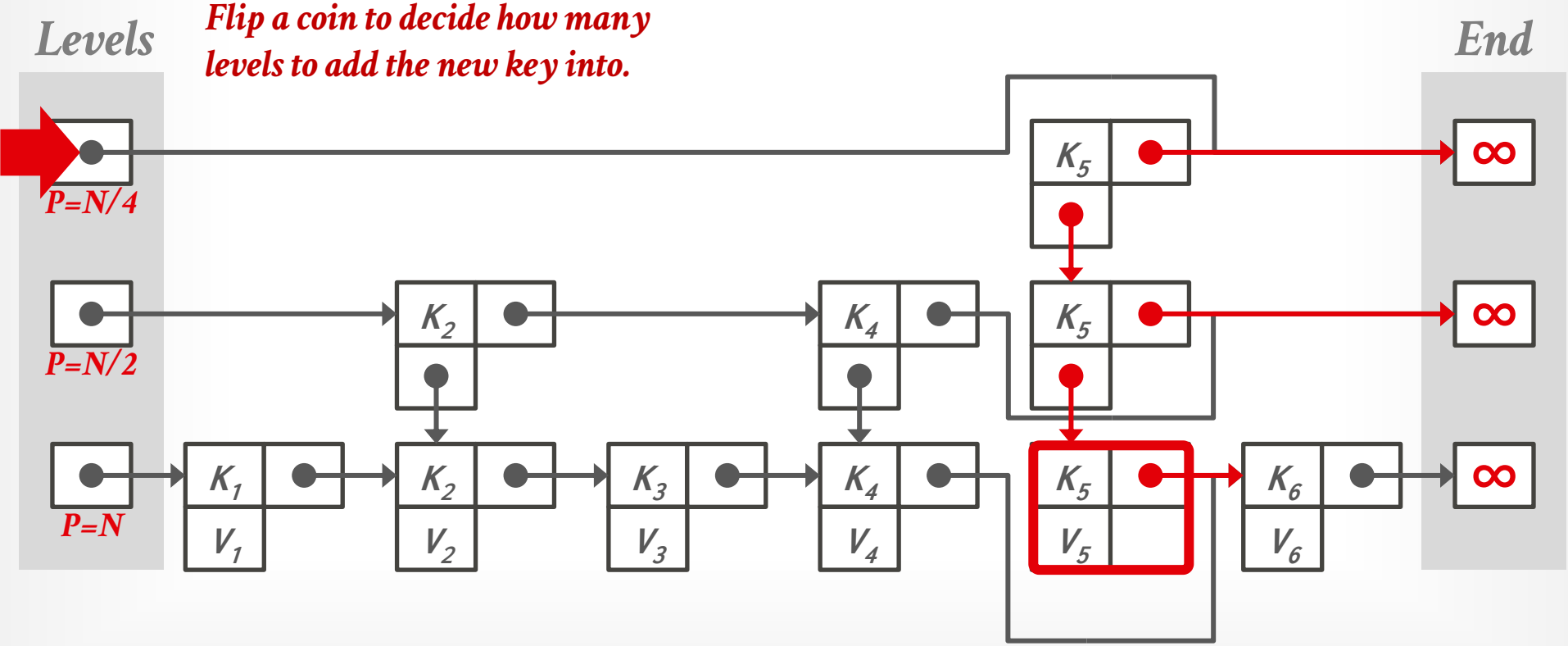

SKIP LISTS: INSERT

Insert K_5

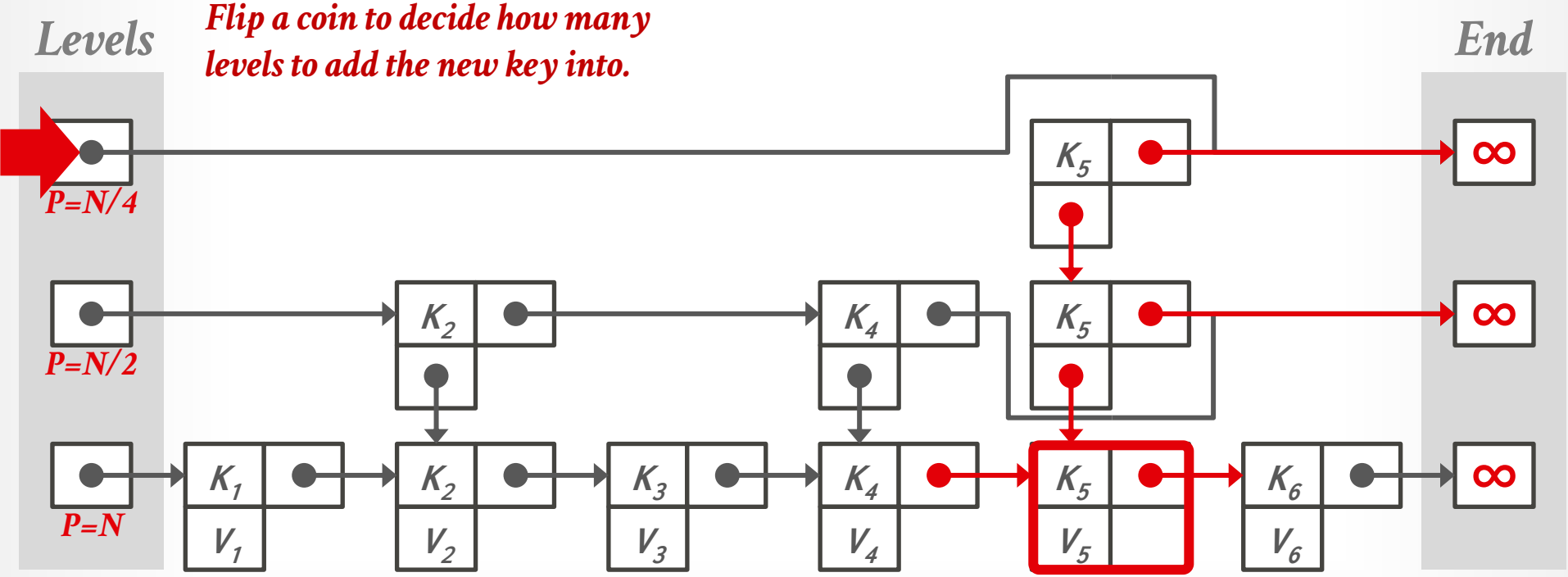

SKIP LISTS: INSERT

Insert K_5

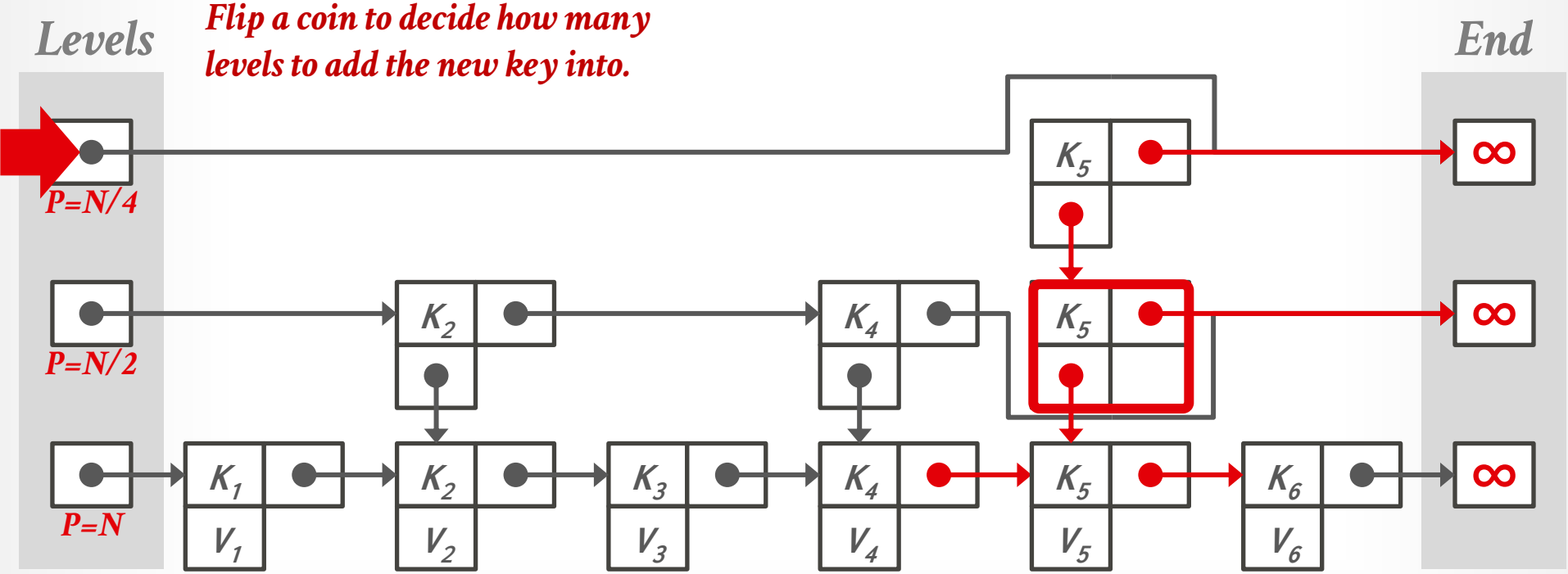

SKIP LISTS: INSERT

Insert K_5

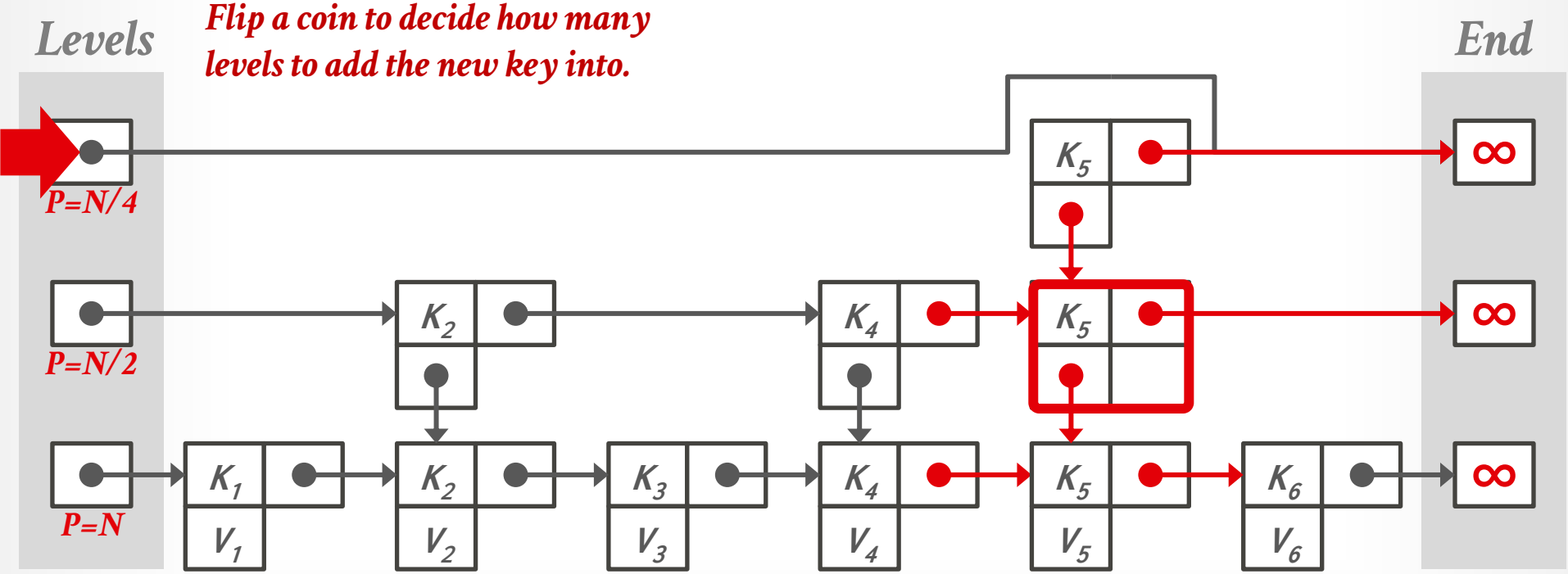

SKIP LISTS: INSERT

Insert K_5

Flip a coin to decide how many levels to add the new key into.

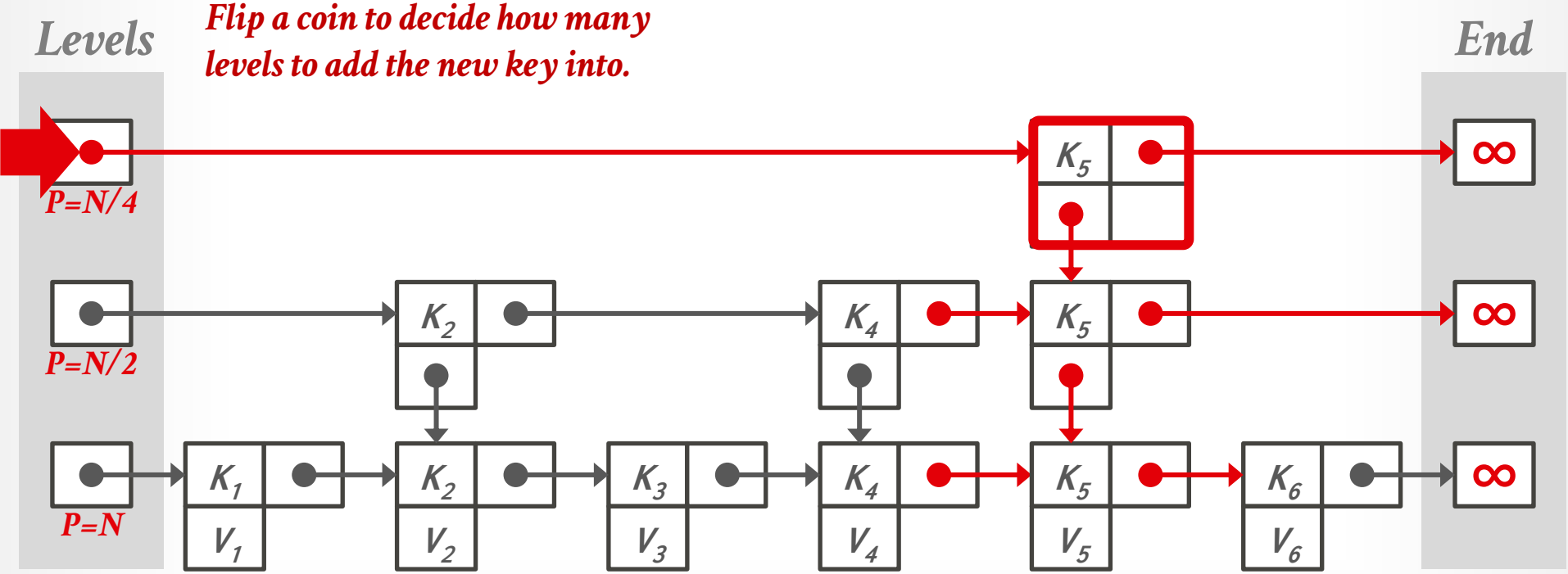

SKIP LISTS: SEARCH

Find K_3

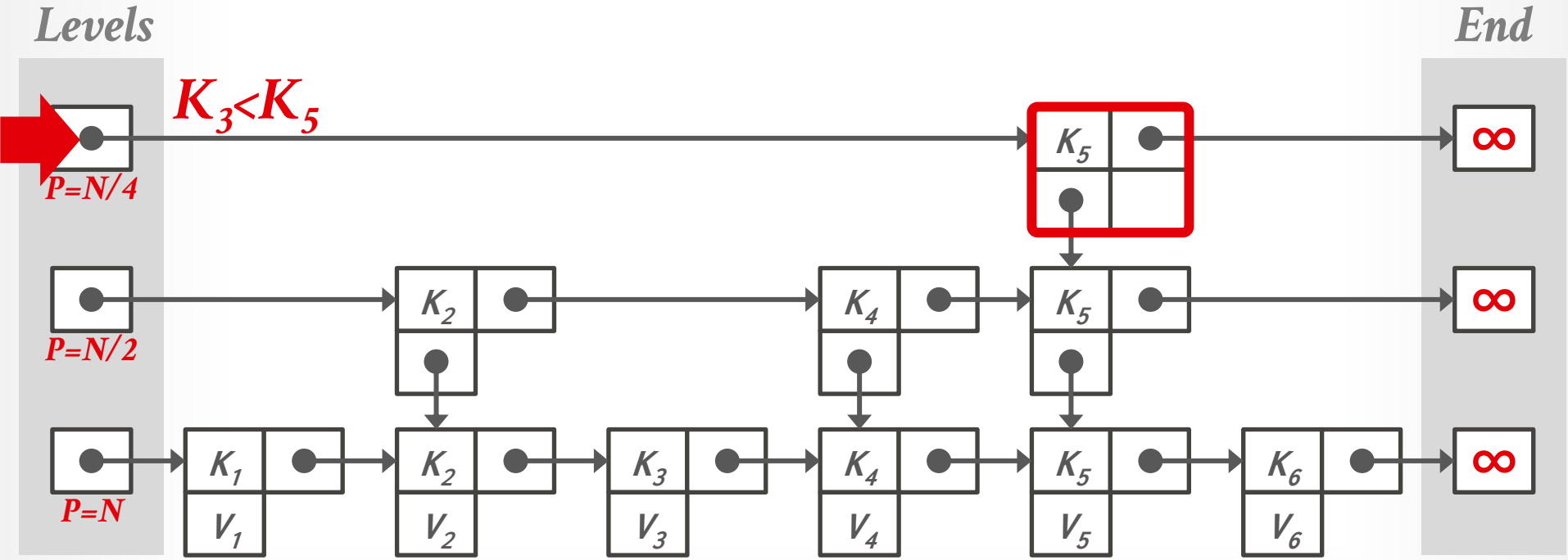

SKIP LISTS: SEARCH

Find K_3

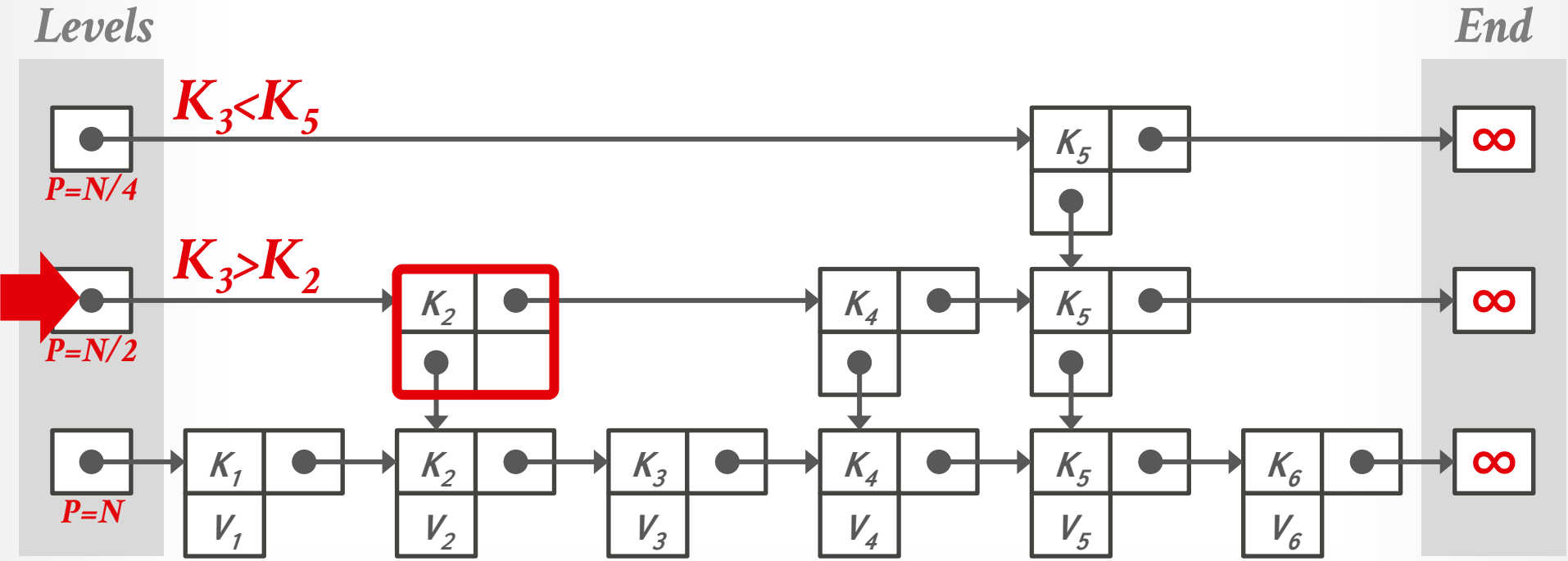

SKIP LISTS: SEARCH

Find K_3

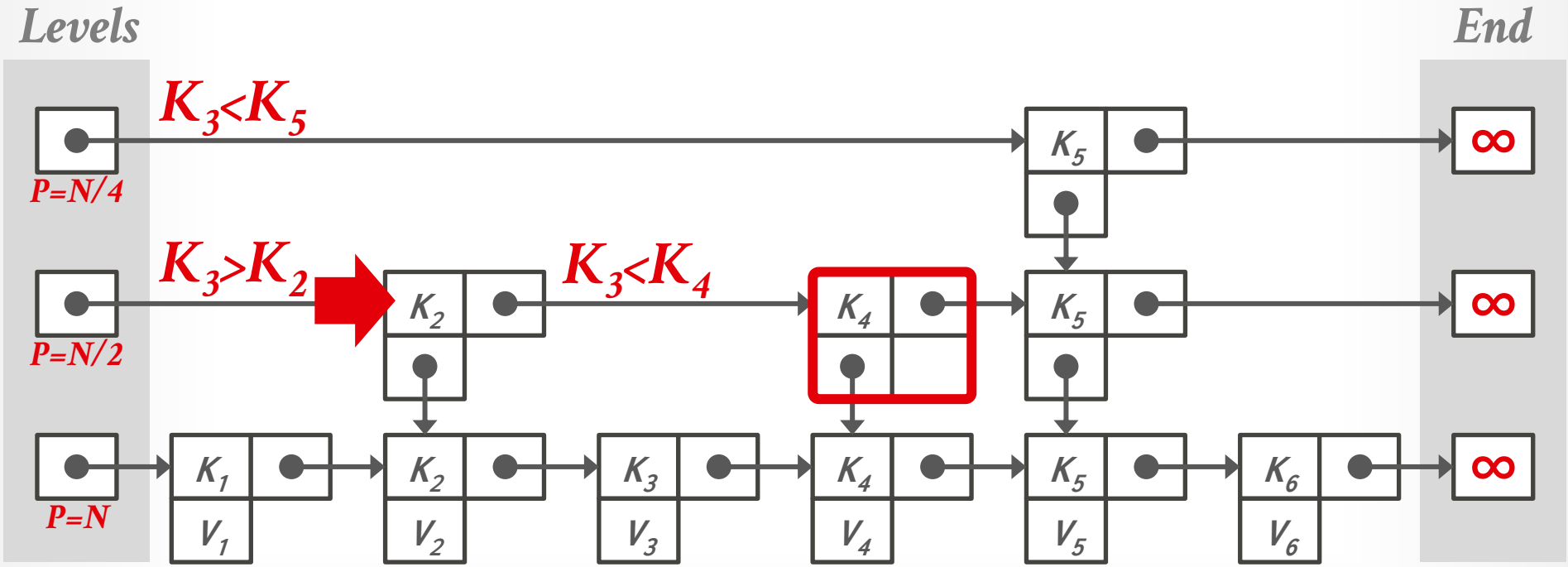

SKIP LISTS: SEARCH

Find K_3

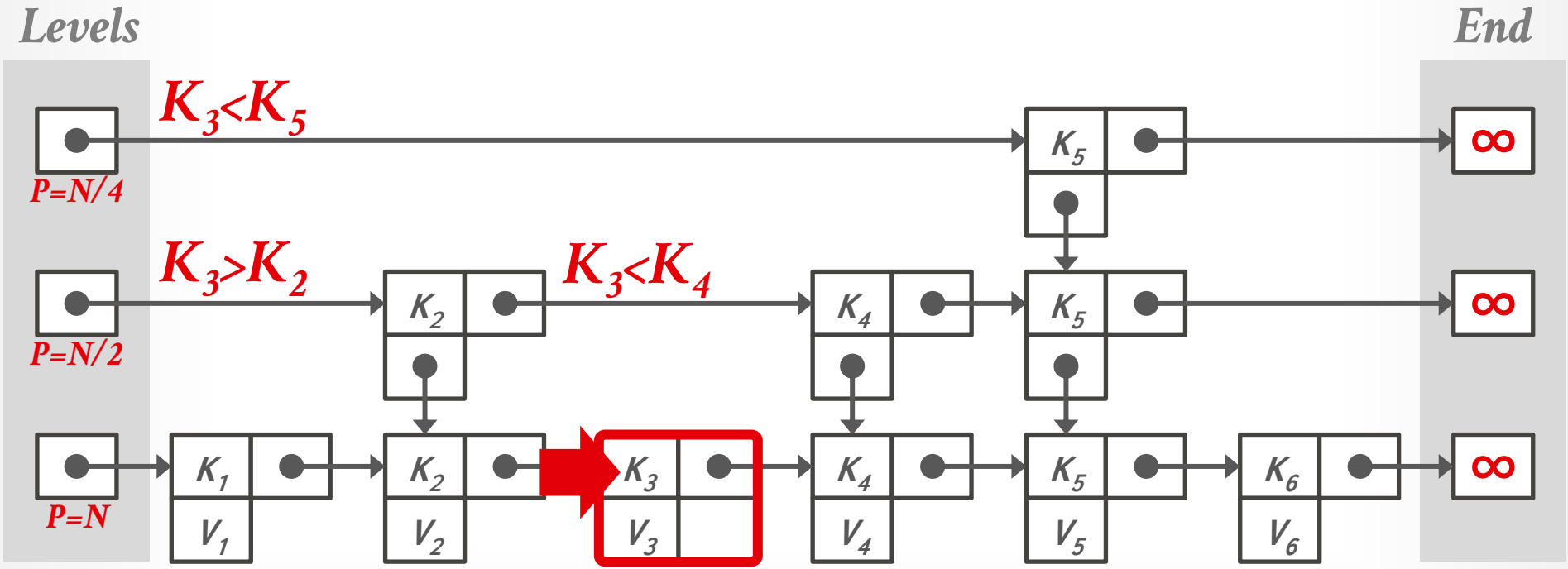

SKIP LISTS: DELETE

First **logically** remove a key from the index by setting a flag to tell threads to ignore.

Then **physically** remove the key once we know that no other thread is holding the reference.

SKIP LISTS: DELETE

Delete K_5

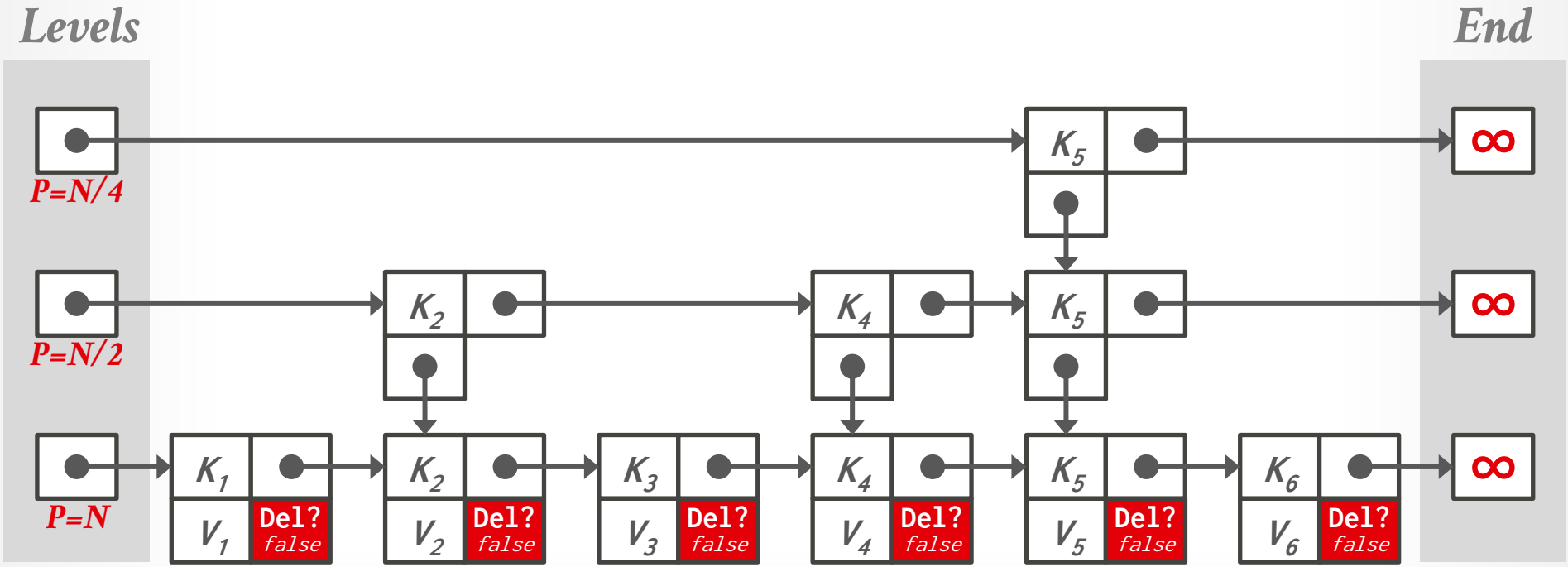

SKIP LISTS: DELETE

Delete K_5

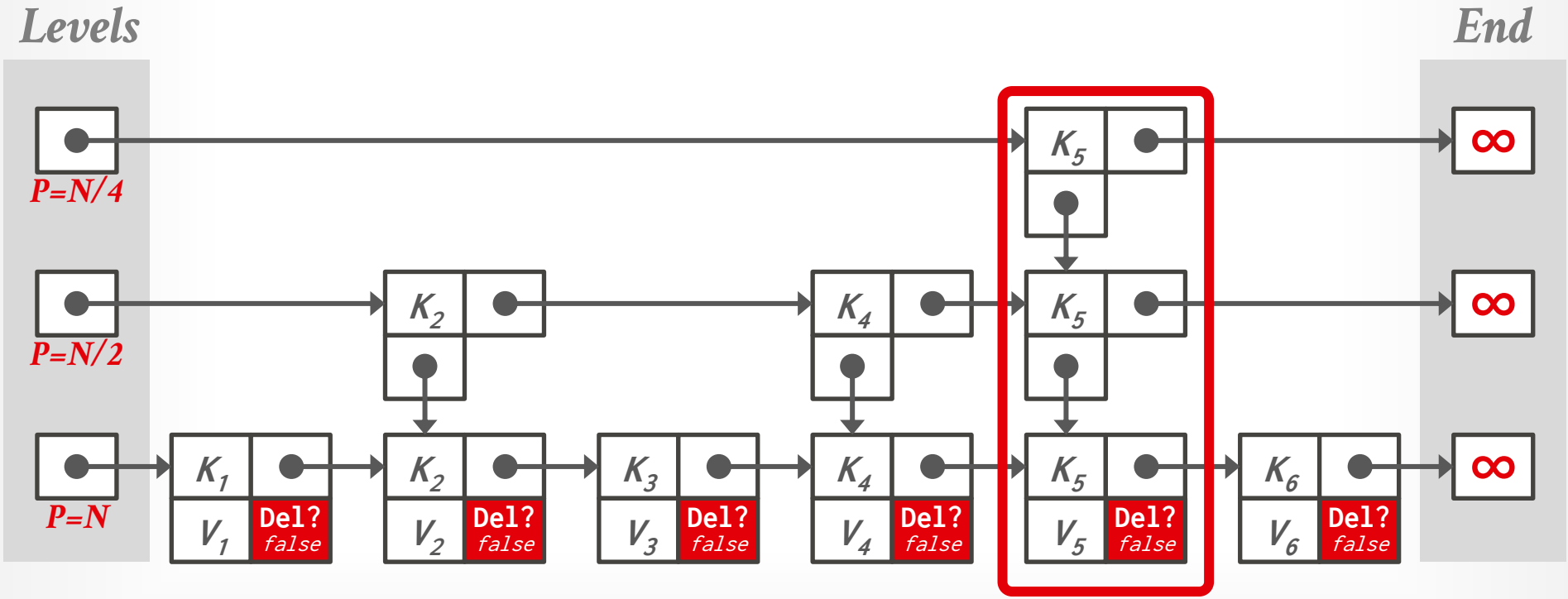

SKIP LISTS: DELETE

Delete K_5

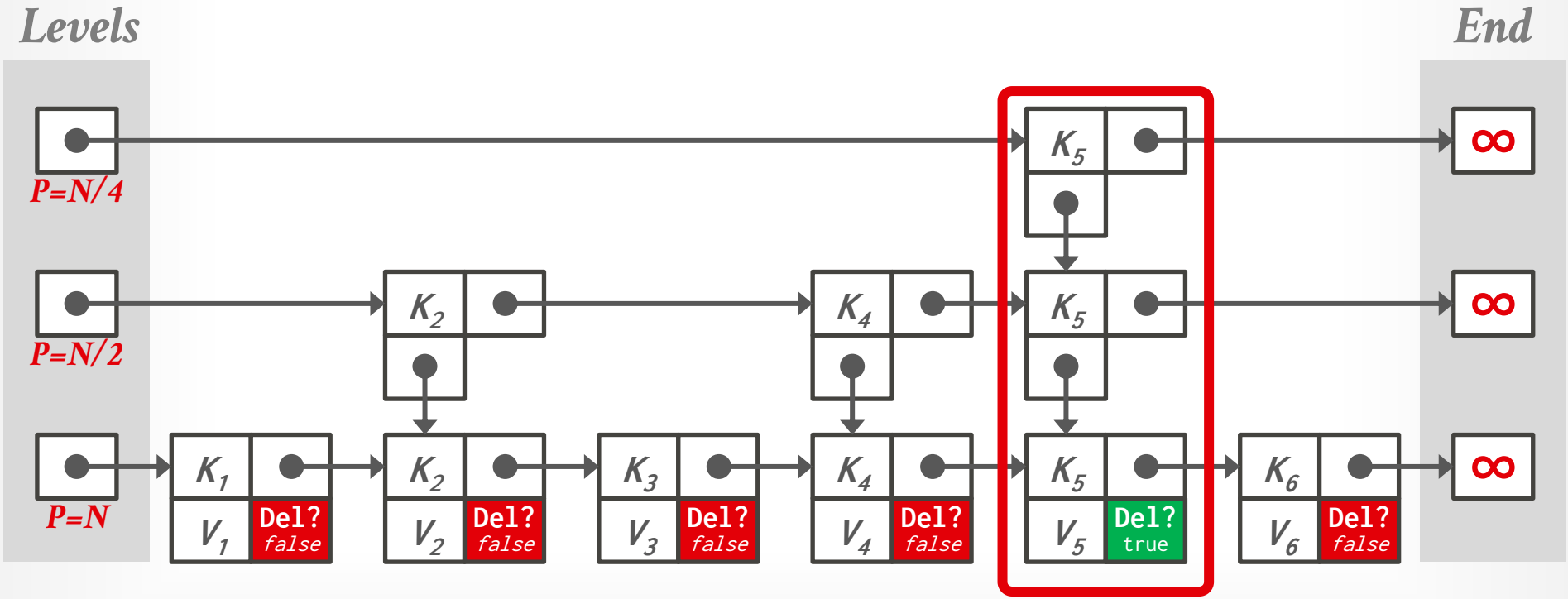

SKIP LISTS: DELETE

Delete K_5

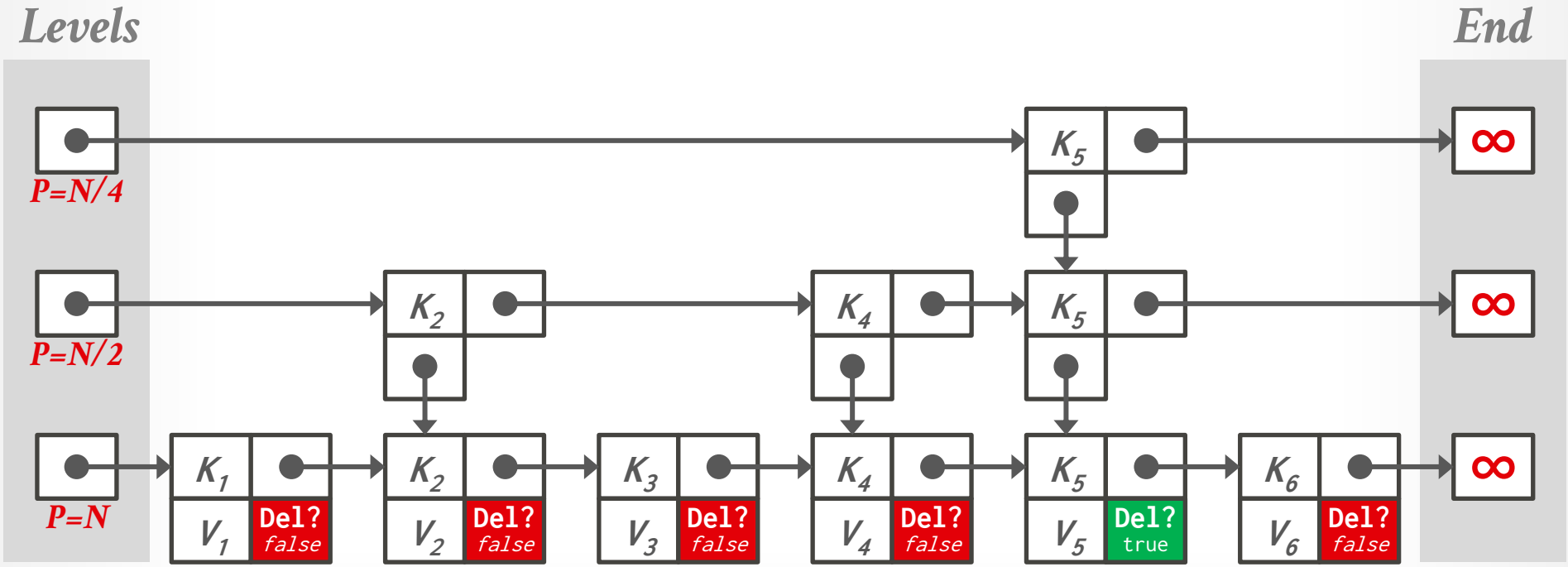

SKIP LISTS: DELETE

Delete K_5

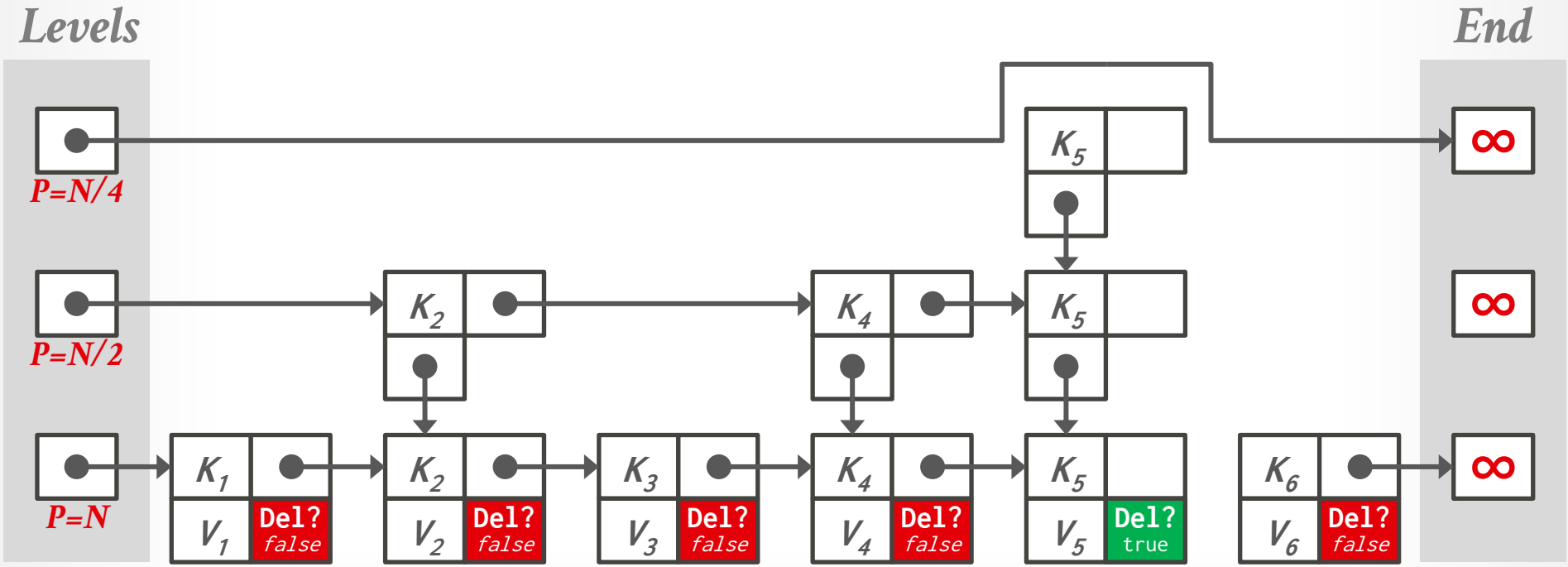

SKIP LISTS: DELETE

Delete K_5

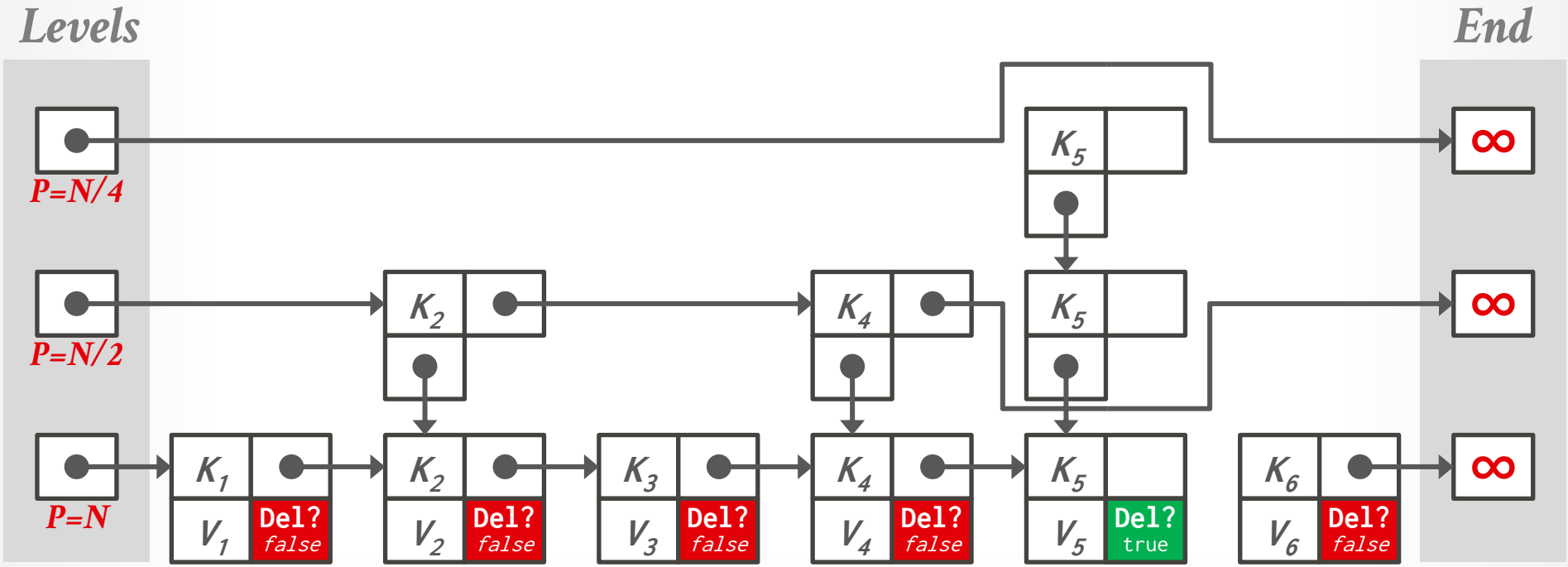

SKIP LISTS: DELETE

Delete K_5

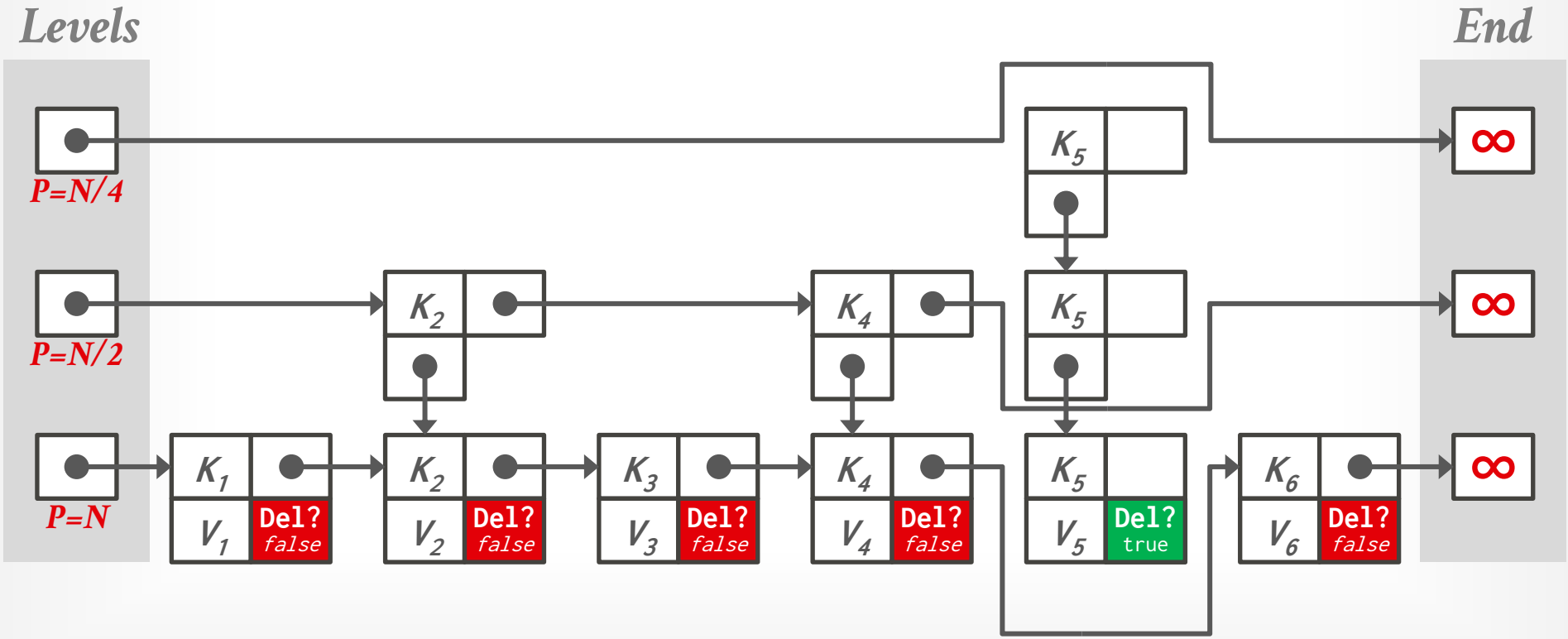

SKIP LISTS: DELETE

Delete K_5

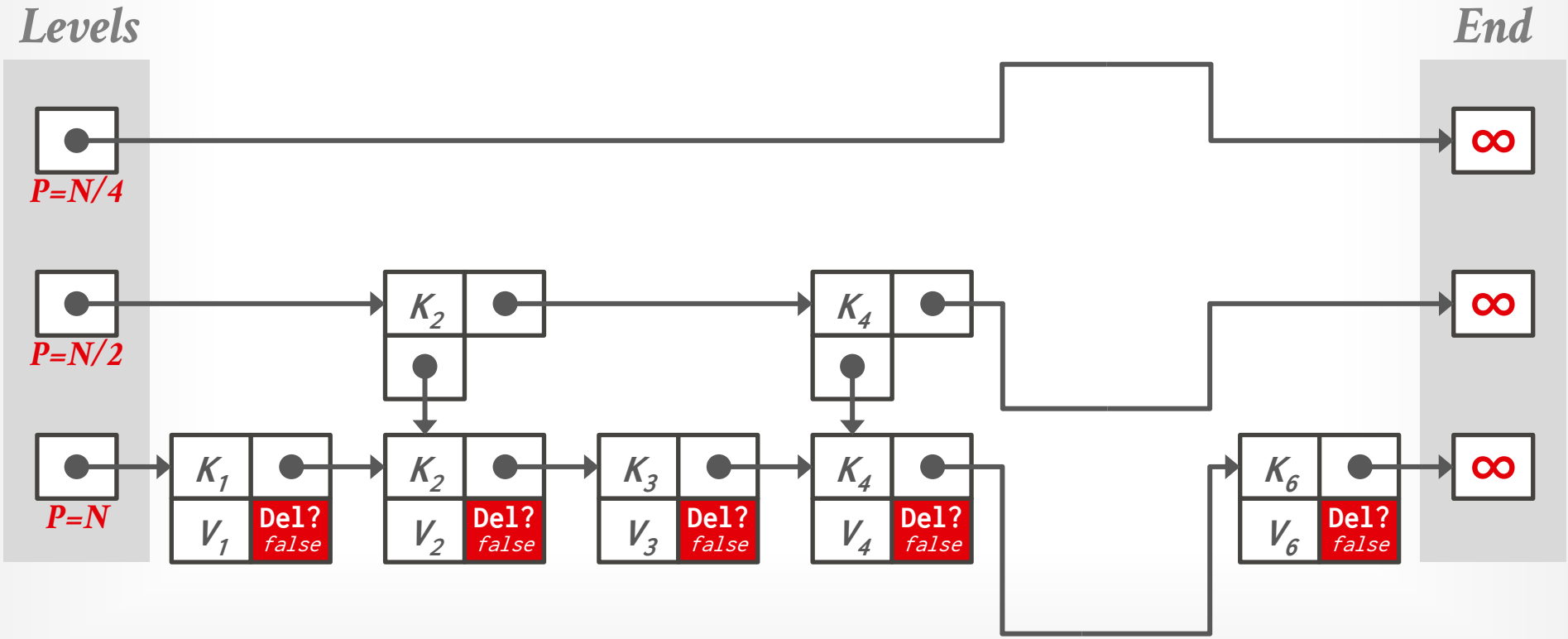

SKIP LISTS

Advantages:

→ May use less memory than a B+Tree, if you do not include reverse pointers.

→ Insertions and deletions do not require rebalancing.

Disadvantages:

→ Not disk/cache friendly because they do not optimize locality of references.

→ Reverse search is non-trivial.

OBSERVATION

The inner node keys in a B+Tree cannot tell you whether a key exists in the index. You must always traverse to the leaf node.

This means that you could have (at least) one buffer pool page miss per level in the tree just to find out a key does not exist.

TRIE INDEX

Use a digital representation of keys to examine prefixes one-by-one.
→ aka ***Digital Search Tree***, ***Prefix Tree***.

Shape depends on keys and lengths.
→ Does <u>not</u> depend on existing keys or insertion order.
→ Does <u>not</u> require rebalancing operations.

All operations have **O(k)** complexity where **k** is the length of the key.
→ Path to a leaf node represents a key.
→ Keys are stored implicitly and can be reconstructed from paths.

Keys: HELLO, HAT, HAVE

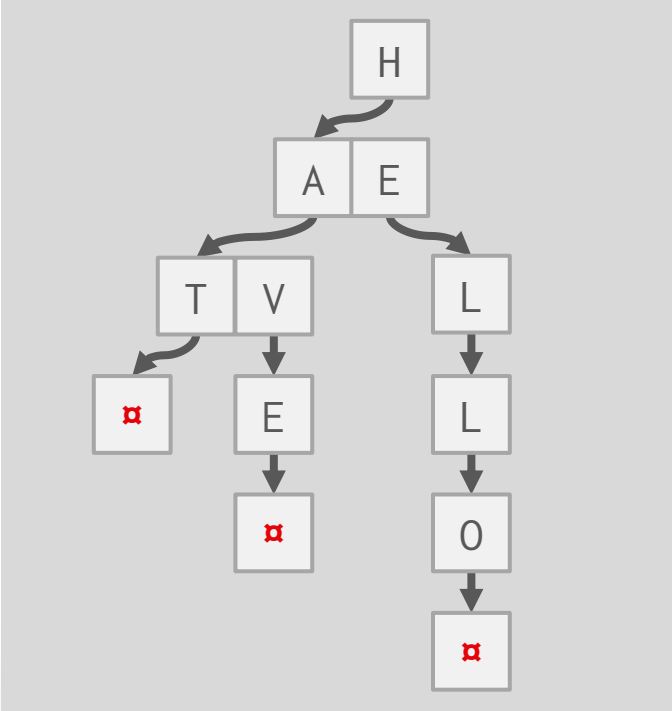

TRIE INDEX

Use a digital representation of keys to examine prefixes one-by-one.
→ aka ***Digital Search Tree***, ***Prefix Tree***.

Shape depends on keys and lengths.
→ Does <u>not</u> depend on existing keys or insertion order.
→ Does <u>not</u> require rebalancing operations.

All operations have **O(k)** complexity where **k** is the length of the key.
→ Path to a leaf node represents a key.
→ Keys are stored implicitly and can be reconstructed from paths.

Keys: HELLO, HAT, HAVE

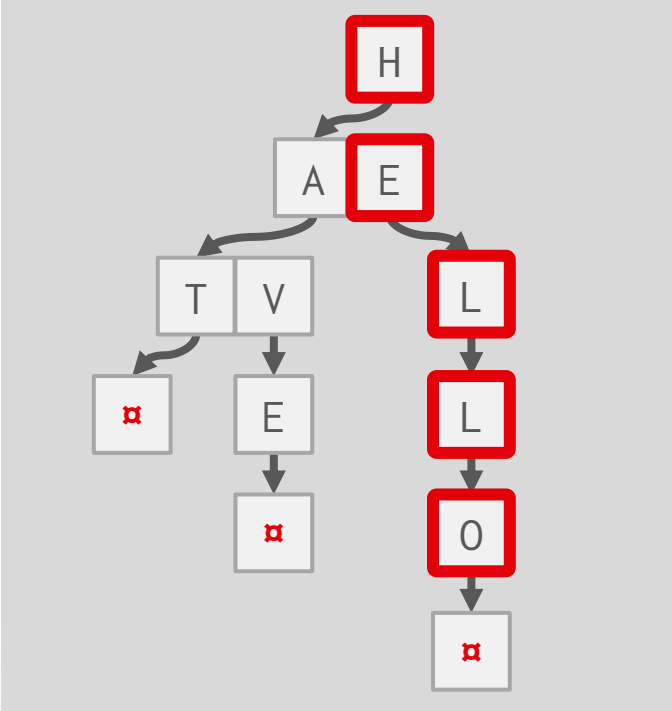

TRIE KEY SPAN

The **span** of a trie level is the number of bits that each partial key / digit represents.

→ If the digit exists in the corpus, then store a pointer to the next level in the trie branch. Otherwise, store null.

This determines the **fan-out** of each node and the physical **height** of the tree.

→ ***n***-way Trie = Fan-Out of ***n***

TRIE KEY SPAN

1-bit Span Trie

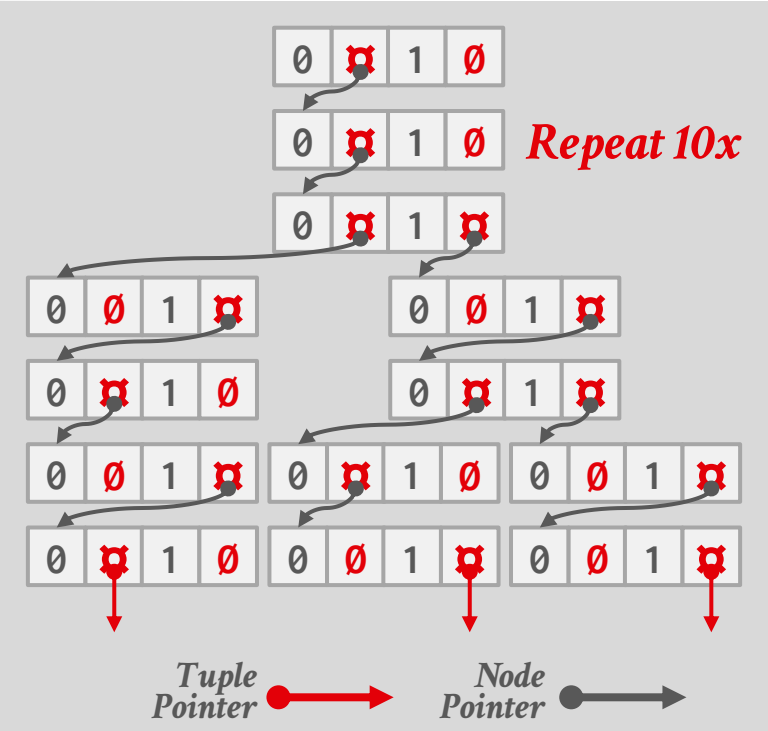

Keys: K10,K25,K31

K10→ 00000000 00001010
K25→ 00000000 00011001
K31→ 00000000 00011111

TRIE KEY SPAN

1-bit Span Trie

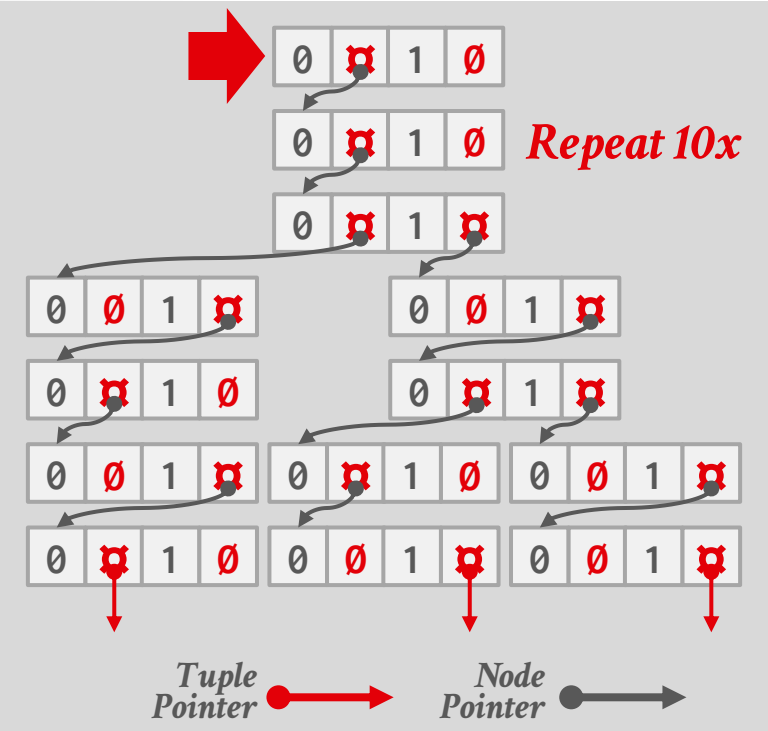

Keys: K10,K25,K31

K10→ 00000000 00001010
K25→ 00000000 00011001
K31→ 00000000 00011111

TRIE KEY SPAN

1-bit Span Trie

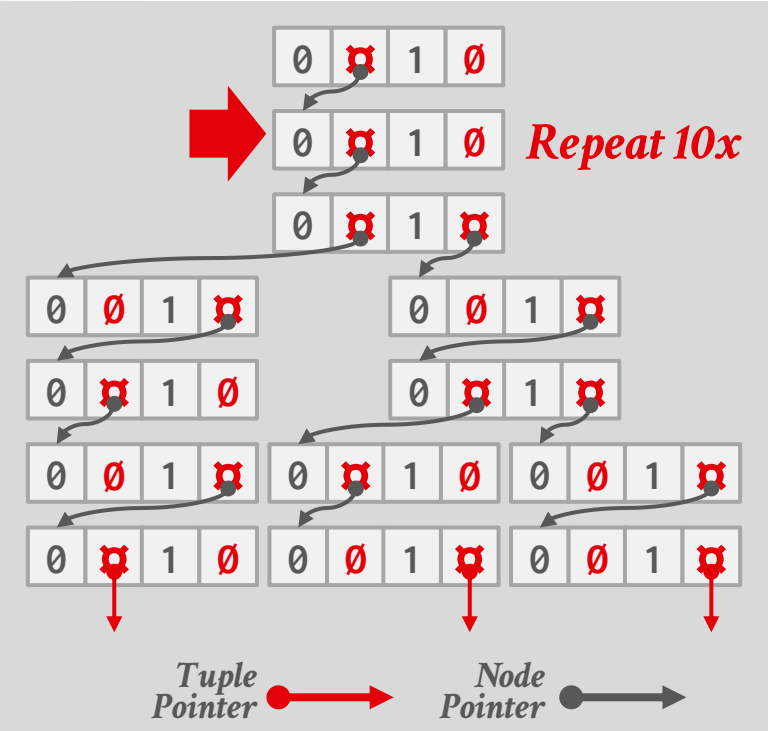

Keys: K10,K25,K31

K10→	00000000	00001010
K25→	00000000	00011001
K31→	00000000	00011111

TRIE KEY SPAN

1-bit Span Trie

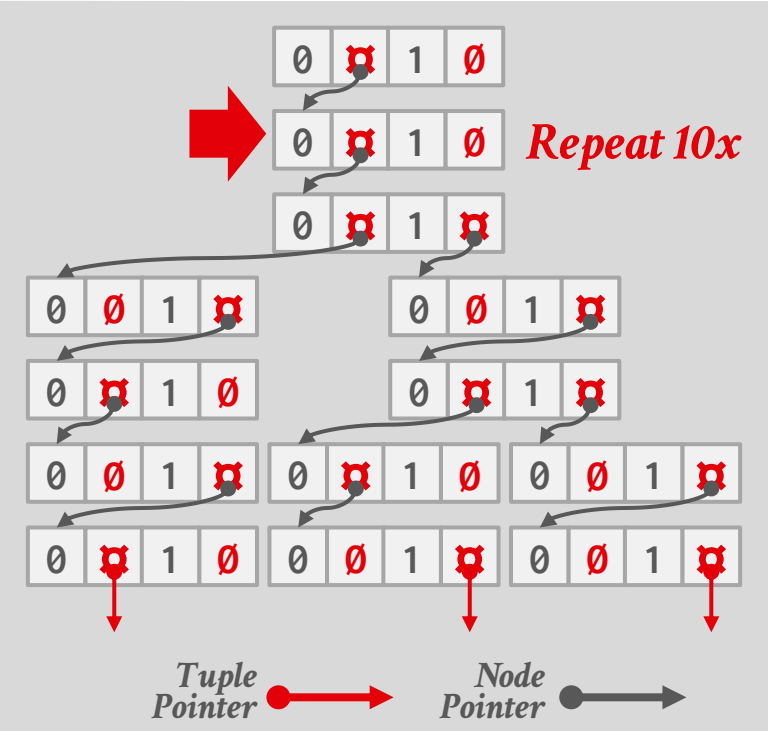

Keys: K10,K25,K31

K10→	00000000	00001010
K25→	00000000	00011001
K31→	00000000	00011111

TRIE KEY SPAN

1-bit Span Trie

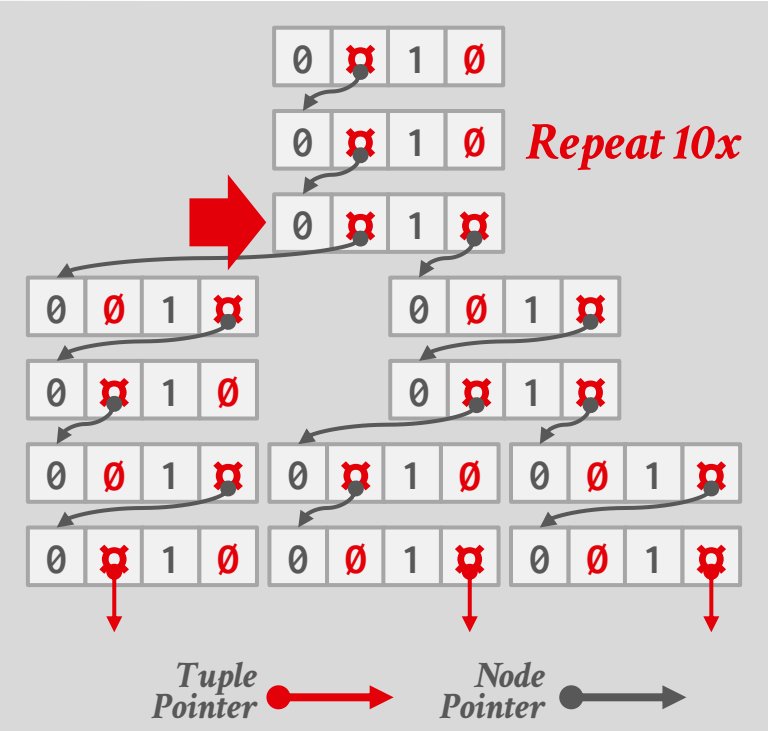

Keys: K10,K25,K31

K10→	00000000	00001010
K25→	00000000	00011001
K31→	00000000	00011111

TRIE KEY SPAN

1-bit Span Trie

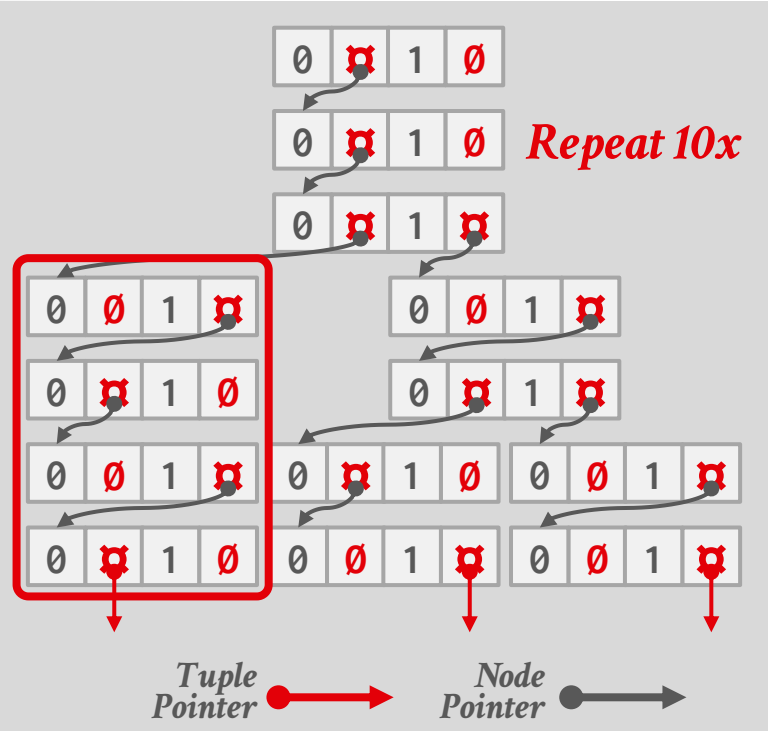

Keys: K10,K25,K31

K10→ 00000000 00001010
K25→ 00000000 00011001
K31→ 00000000 00011111

TRIE KEY SPAN

1-bit Span Trie

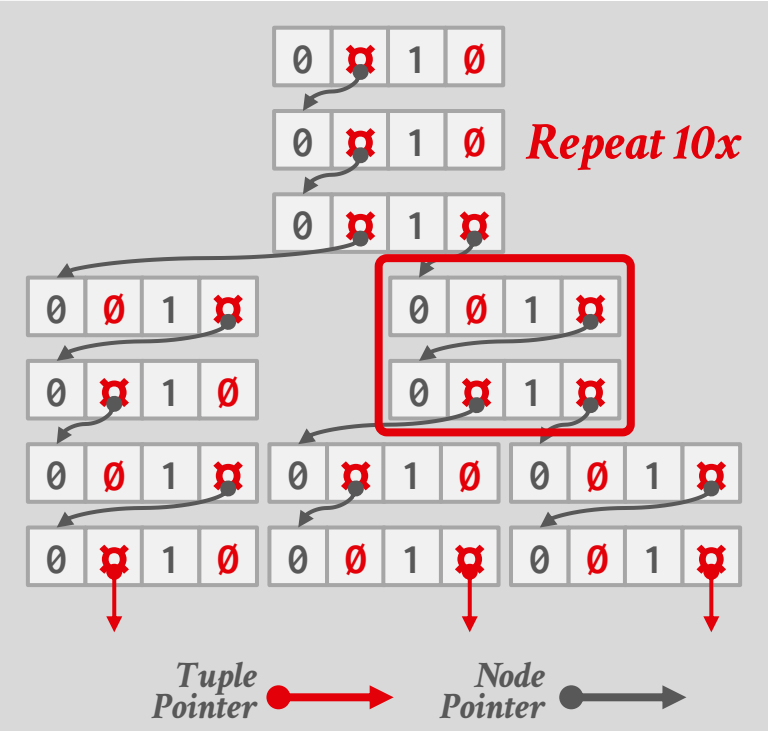

Keys: K10,K25,K31

K10→ 00000000 00001010
K25→ 00000000 00011001
K31→ 00000000 00011111

TRIE KEY SPAN

1-bit Span Trie

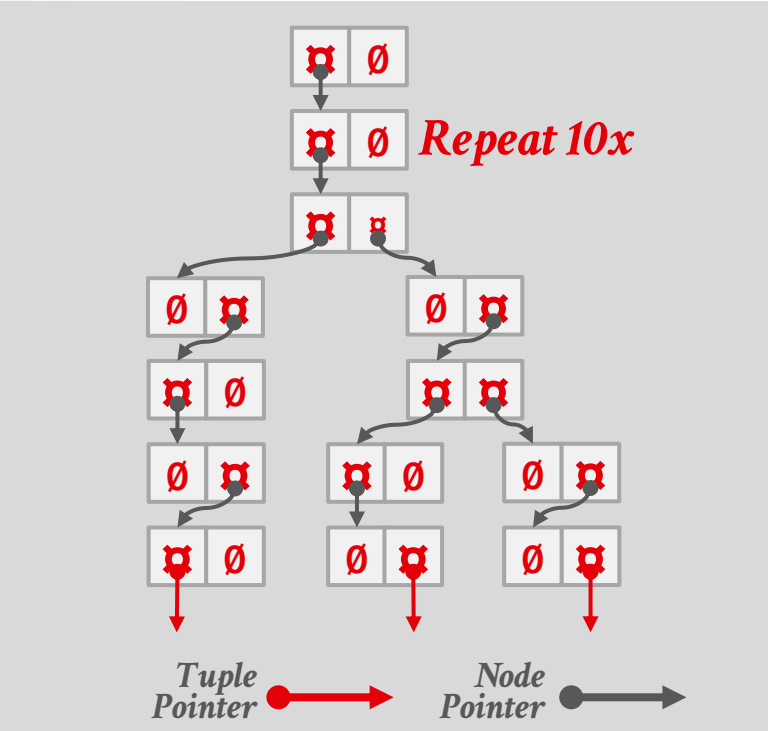

Keys: K10,K25,K31

K10→ 00000000 00001010
K25→ 00000000 00011001
K31→ 00000000 00011111

TRIE KEY SPAN

1-bit Span Trie

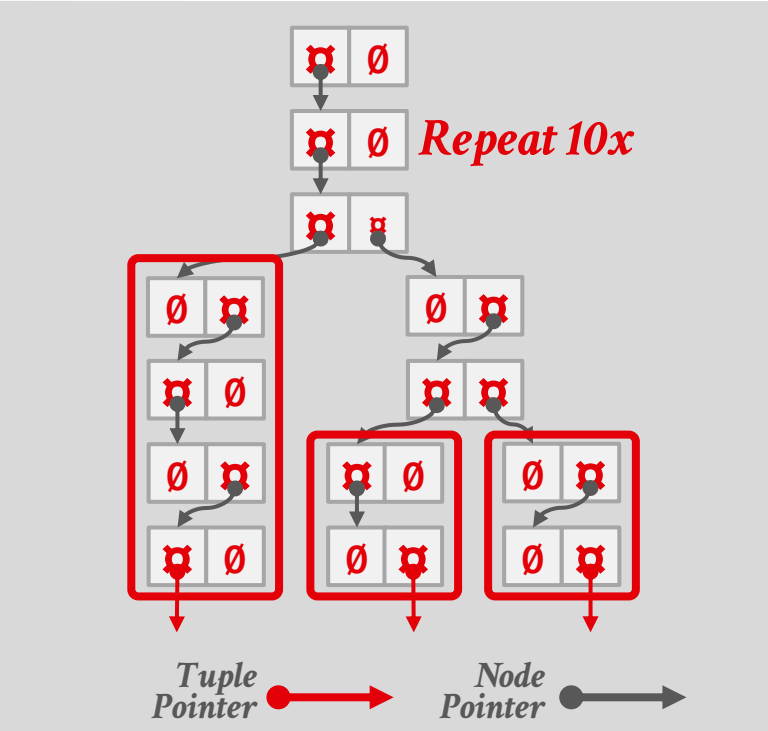

Keys: K10,K25,K31

K10→ 00000000 00001010
K25→ 00000000 00011001
K31→ 00000000 00011111

RADIX TREE

1-bit Span Radix Tree

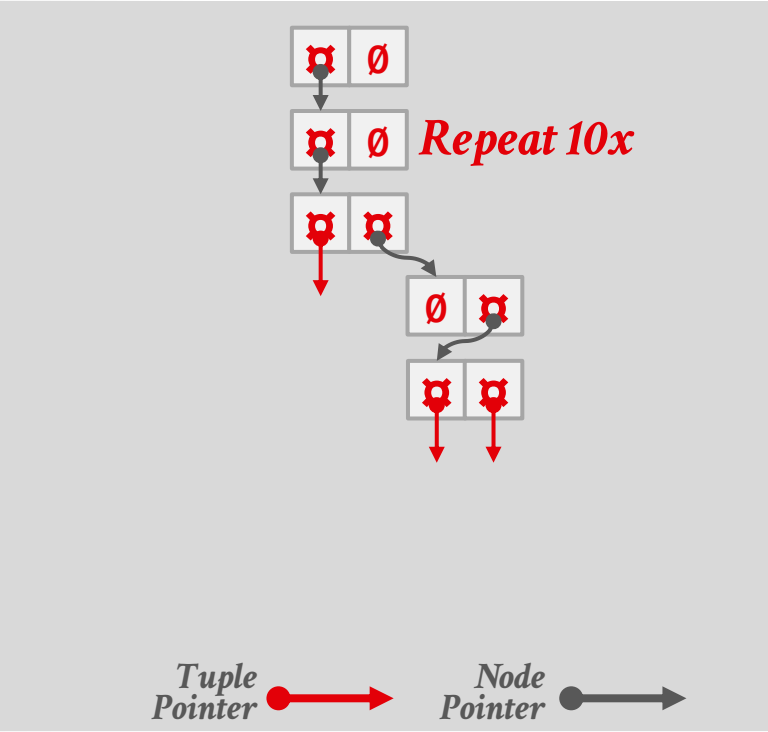

Vertically compressed trie that compacts nodes with a single child.
→ aka ***Patricia Trees*** (2-way tries)

Can produce false positives, so the DBMS always checks the original tuple to see whether a key matches.

RADIX TREE: MODIFICATIONS

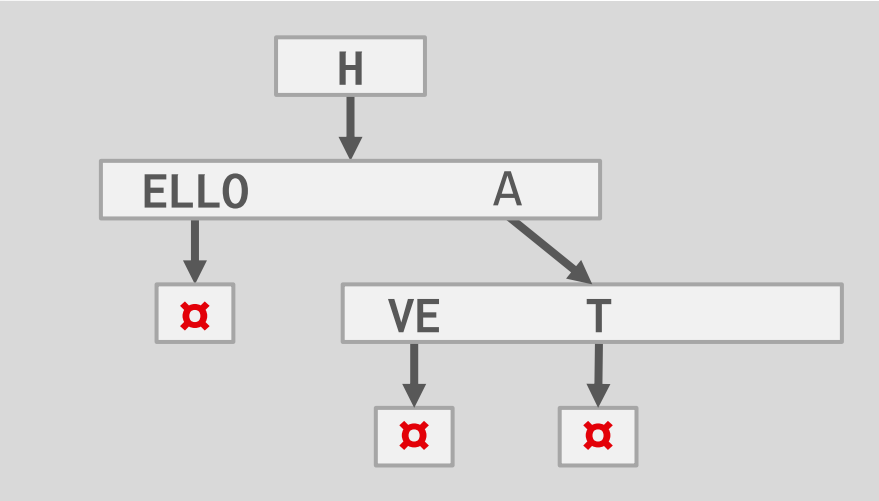

Insert HAIR

RADIX TREE: MODIFICATIONS

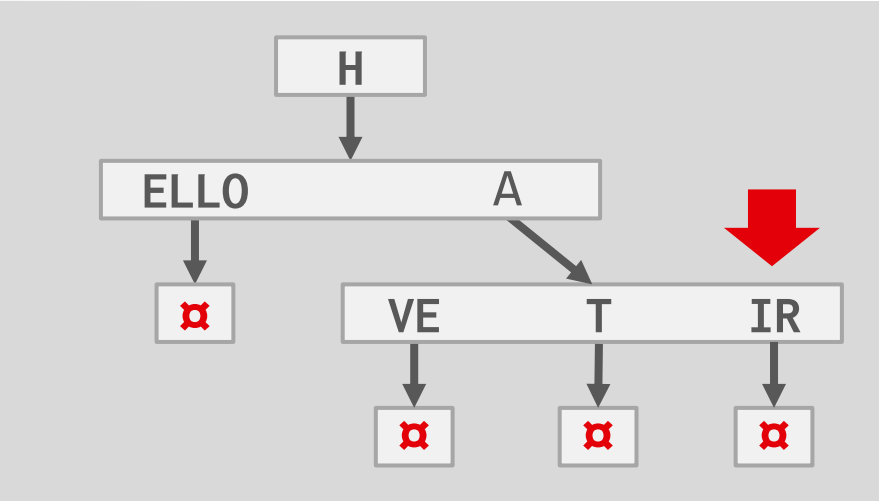

Insert HAIR

RADIX TREE: MODIFICATIONS

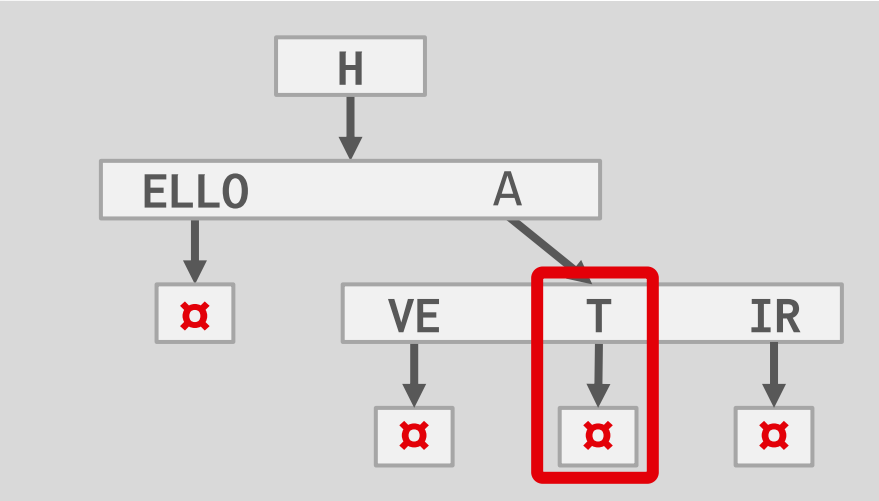

Insert HAIR

Delete HAT

RADIX TREE: MODIFICATIONS

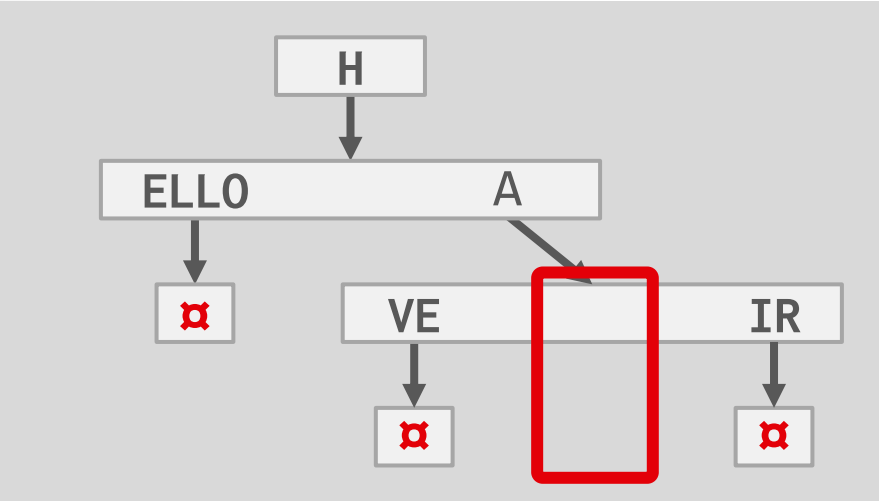

Insert HAIR

Delete HAT

RADIX TREE: MODIFICATIONS

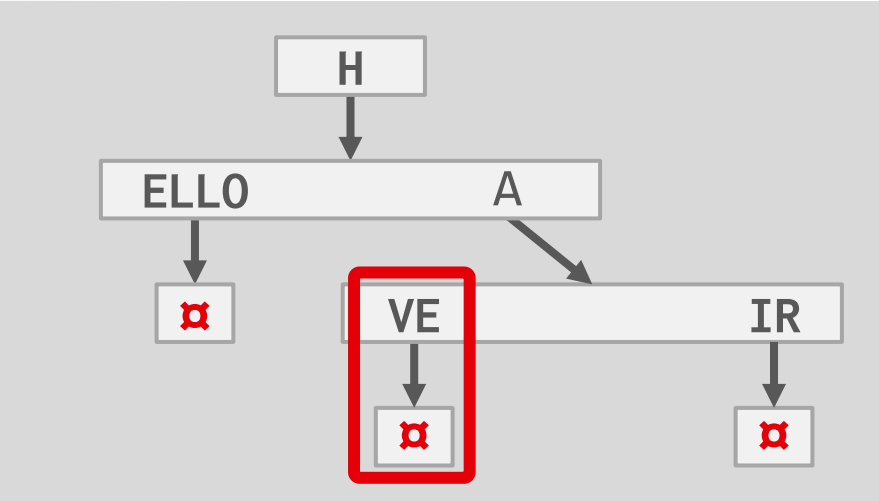

Insert HAIR

Delete HAT

Delete HAVE

RADIX TREE: MODIFICATIONS

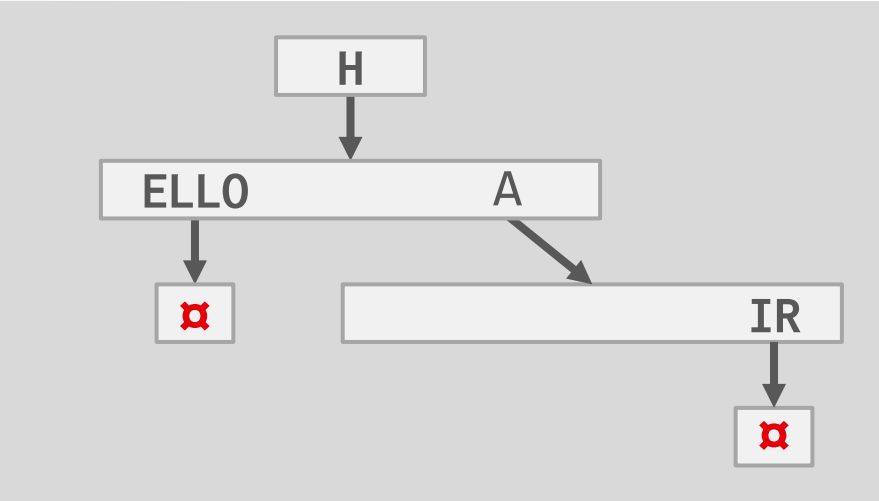

Insert HAIR

Delete HAT

Delete HAVE

RADIX TREE: MODIFICATIONS

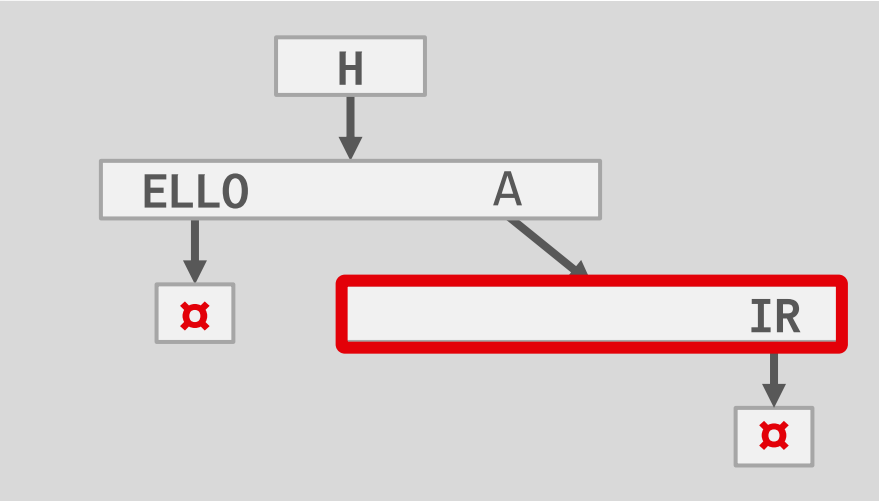

Insert HAIR

Delete HAT

Delete HAVE

RADIX TREE: MODIFICATIONS

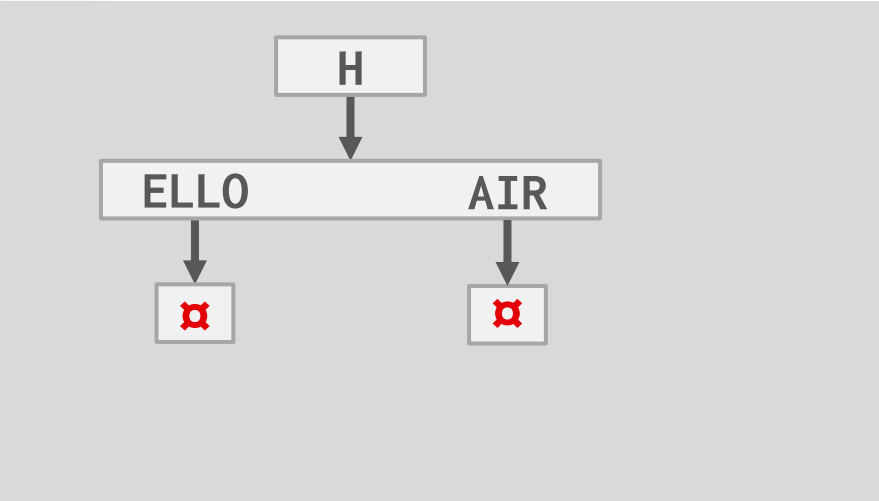

Insert HAIR

Delete HAT

Delete HAVE

TRIE VARIANTS

Judy Arrays (HP)

→ 256-way radix tree. First known radix tree that supports adaptive node representation.

ART Index (HyPer)

→ 256-way radix tree that also adapts node types based on its population.

Masstree (Silo)

→ B+Tree that uses tries inside each node for its key/value mapping.

SuRF (CMU)

→ Compressed static trie that supports point and range queries.

OBSERVATION

The indexes that we've discussed are useful for "point" and "range" queries:

→ Find all customers in the 15217 zipcode.

→ Find all orders between June 2024 and September 2024.

They are **not** good at keyword searches:

→ Example: Find all Wikipedia articles that contain the word "Pavlo"

revisions(id,content,…)

id	content
11	Wu-Tang Clan is an American hip hop musical collective formed in Staten Island, New York City, in 1992...
22	Carnegie Mellon University (CMU) is a private research university in Pittsburgh, Pennsylvania. The institution was established in 1900 by Andrew Carnegie...
33	In computing, a database is an organized collection of data or a type of data store based on the use of a database management system (DBMS), the software...
44	Andrew Pavlo, best known as Andy Pavlo, is an associate professor of Computer Science at Carnegie Mellon University. He conducts research on database...

```
CREATE INDEX idx_rev_cntnt
    ON revisions (content);
```

```
SELECT pageID FROM revisions
 WHERE content LIKE '%Pavlo%';
```

INVERTED INDEX

An **inverted index** stores a mapping of terms to records that contain those terms in the target attribute.

→ Sometimes called a ***full-text search index***.

→ Originally called a ***concordance*** (1200s).

Many major DBMSs support these natively. But there are also specialized DBMSs and libraries.

revisions(id,content,…)

id	content
11	Wu-Tang Clan is an American hip hop musical collective formed in Staten Island, New York City, in 1992...
22	Carnegie Mellon University (CMU) is a private research university in Pittsburgh, Pennsylvania. The institution was established in 1900 by Andrew Carnegie...
33	In computing, a database is an organized collection of data or a type of data store based on the use of a database management system (DBMS), the software...
44	Andrew Pavlo, best known as Andy Pavlo, is an associate professor of Computer Science at Carnegie Mellon University. He conducts research on database...

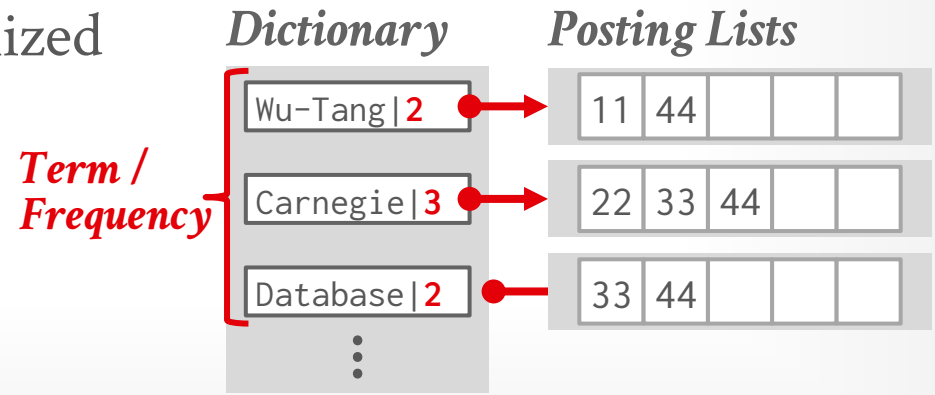

INVERTED INDEX

An **inverted index** stores a mapping of terms to records that contain those terms in the target attribute.

→ Sometimes called a ***full-text search index***.

→ Originally called a ***concordance*** (1200s).

Many major DBMSs support these natively. But there are also specialized DBMSs and libraries.

revisions(id,content,…)

id	content
11	Wu-Tang Clan is an American hip hop musical collective formed in Staten Island, New York City, in 1992...
22	Carnegie Mellon University (CMU) is a private research university in Pittsburgh, Pennsylvania. The institution was established in 1900 by Andrew Carnegie...
33	In computing, a database is an organized collection of data or a type of data store based on the use of a database management system (DBMS), the software...
44	Andrew Pavlo, best known as Andy Pavlo, is an associate professor of Computer Science at Carnegie Mellon University. He conducts research on database...

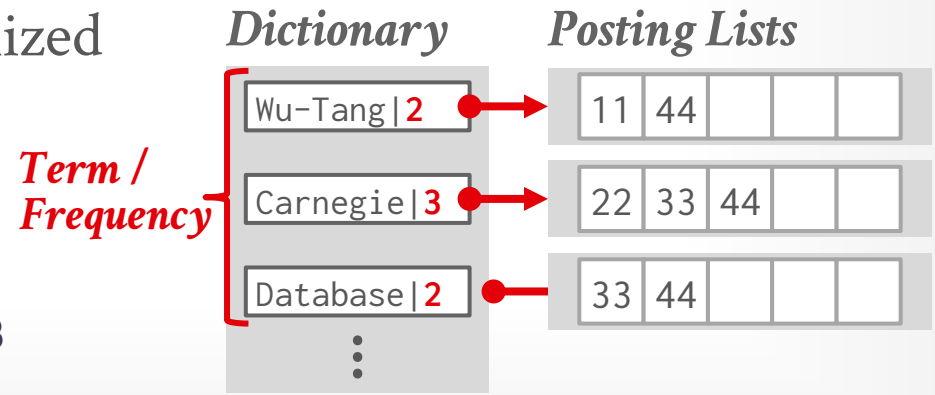

Lucene, Xapian, tantivy, elasticsearch, OpenSearch, QUICKWIT, vespa, Solr, Sphinx, ParadeDB, splunk>

INVERTED INDEX

An **inverted index** stores a mapping of terms to records that contain those terms in the target attribute.

→ Sometimes called a ***full-text search index***.

→ Originally called a ***concordance*** (1200s).

Many major DBMSs support these natively. But there are also specialized DBMSs and libraries.

revisions(id,content,…)

id	content
11	Wu-Tang Clan is an American hip hop musical collective formed in Staten Island, New York City, in 1992...
22	Carnegie Mellon University (CMU) is a private research university in Pittsburgh, Pennsylvania. The institution was established in 1900 by Andrew Carnegie...
33	In computing, a database is an organized collection of data or a type of data store based on the use of a database management system (DBMS), the software...
44	Andrew Pavlo, best known as Andy Pavlo, is an associate professor of Computer Science at Carnegie Mellon University. He conducts research on database...

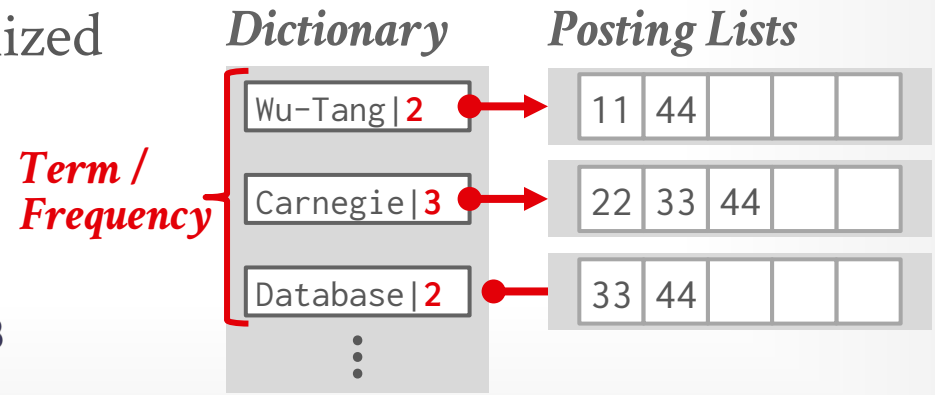

Lucene, Xapian, tantivy, elasticsearch, OpenSearch, QUICKWIT, vespa, Solr, Sphinx, ParadeDB, splunk>

INVERTED INDEX: LUCENE

Uses a **Finite State Transducer** for determining offset of terms in dictionary.

Incrementally create dictionary segments and then merge them in the background.

→ Uses compression methods we previously discussed (e.g., delta, bit packing).

→ Also supports precomputed aggregations for terms and occurrences.

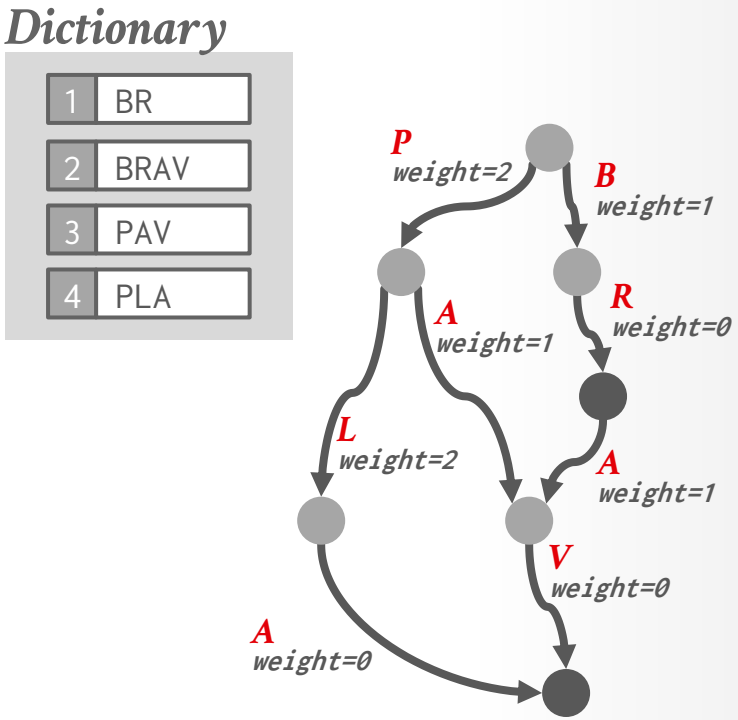

INVERTED INDEX: LUCENE

Uses a **Finite State Transducer** for determining offset of terms in dictionary.

Incrementally create dictionary segments and then merge them in the background.

→ Uses compression methods we previously discussed (e.g., delta, bit packing).

→ Also supports precomputed aggregations for terms and occurrences.

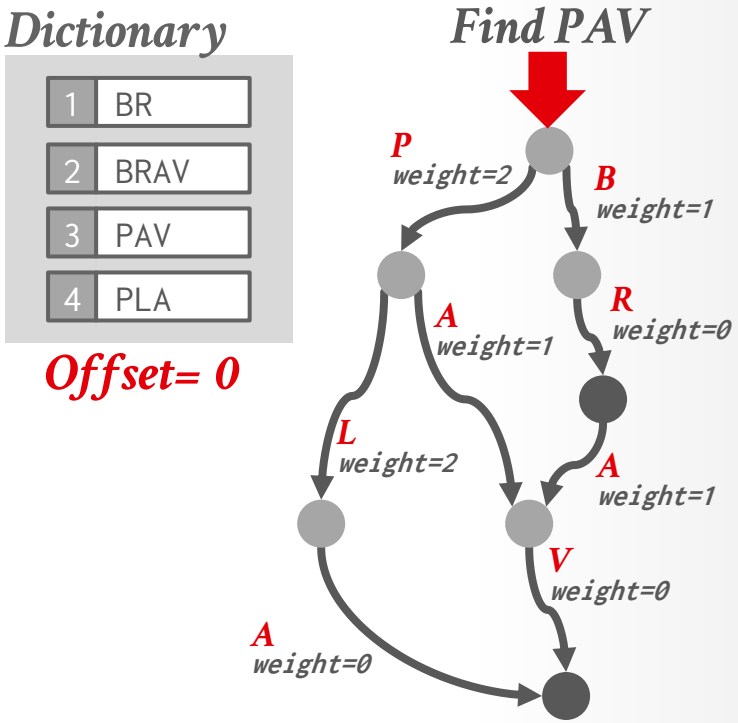

INVERTED INDEX: LUCENE

Uses a **Finite State Transducer** for determining offset of terms in dictionary.

Incrementally create dictionary segments and then merge them in the background.

→ Uses compression methods we previously discussed (e.g., delta, bit packing).

→ Also supports precomputed aggregations for terms and occurrences.

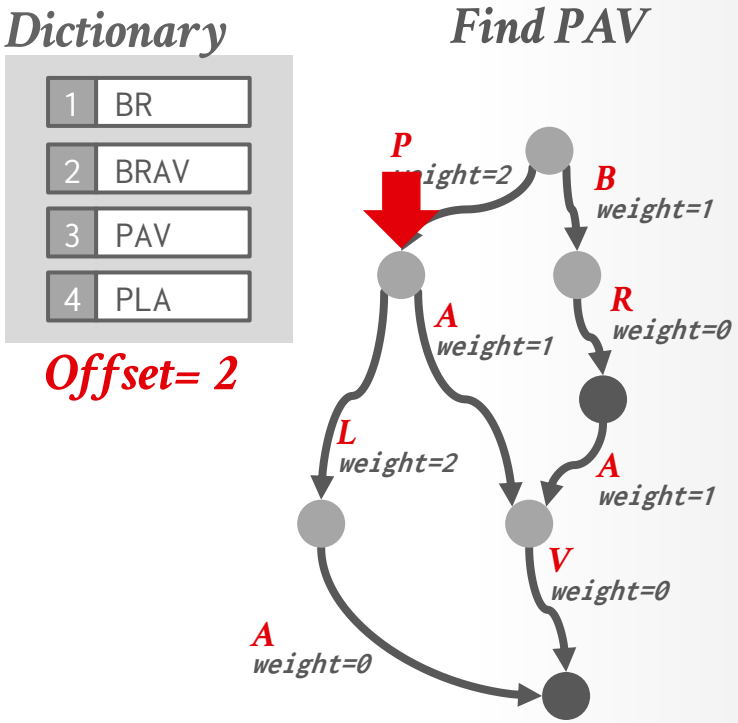

INVERTED INDEX: LUCENE

Uses a **Finite State Transducer** for determining offset of terms in dictionary.

Incrementally create dictionary segments and then merge them in the background.

→ Uses compression methods we previously discussed (e.g., delta, bit packing).

→ Also supports precomputed aggregations for terms and occurrences.

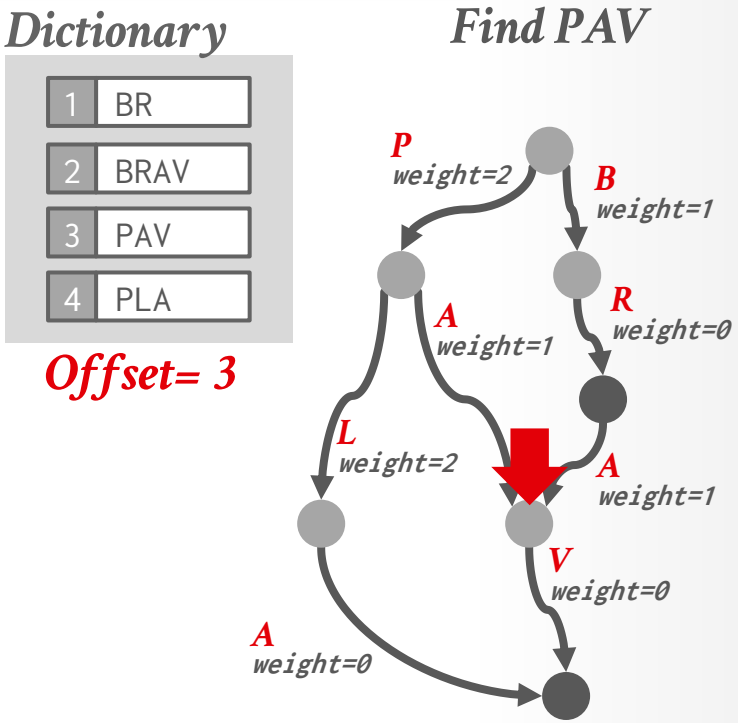

INVERTED INDEX: LUCENE

Uses a **Finite State Transducer** for determining offset of terms in dictionary.

Incrementally create dictionary segments and then merge them in the background.

→ Uses compression methods we previously discussed (e.g., delta, bit packing).

→ Also supports precomputed aggregations for terms and occurrences.

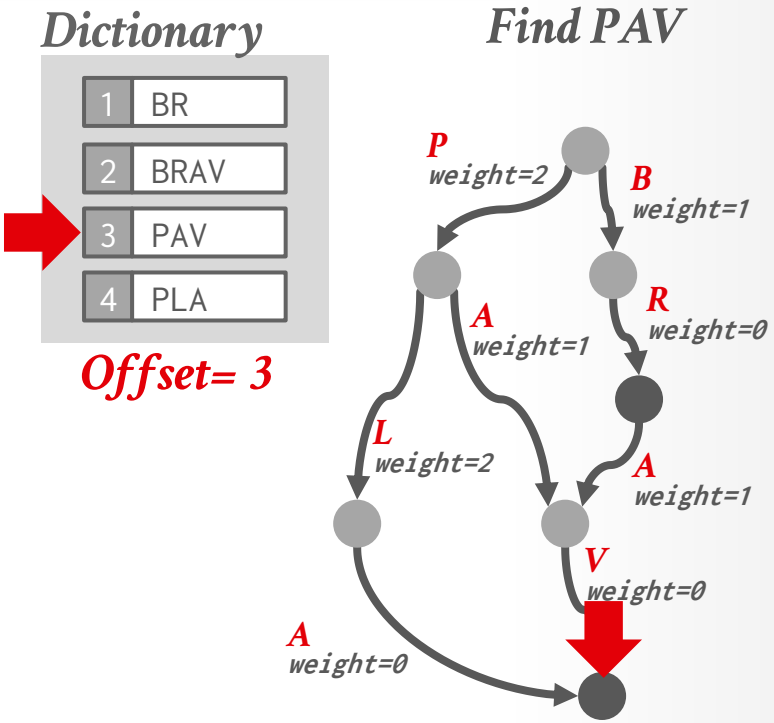

INVERTED INDEX: POSTGRESQL

PostgreSQL's **Generalized Inverted Index** (GIN) uses a B+Tree for the term dictionary that map to a posting list data structure.

Posting list contents varies depending on number of records per term:

→ **Few**: Sorted list of record ids.
→ **Many**: Another B+Tree of record ids.

Uses a separate "pending list" log to avoid incremental updates.

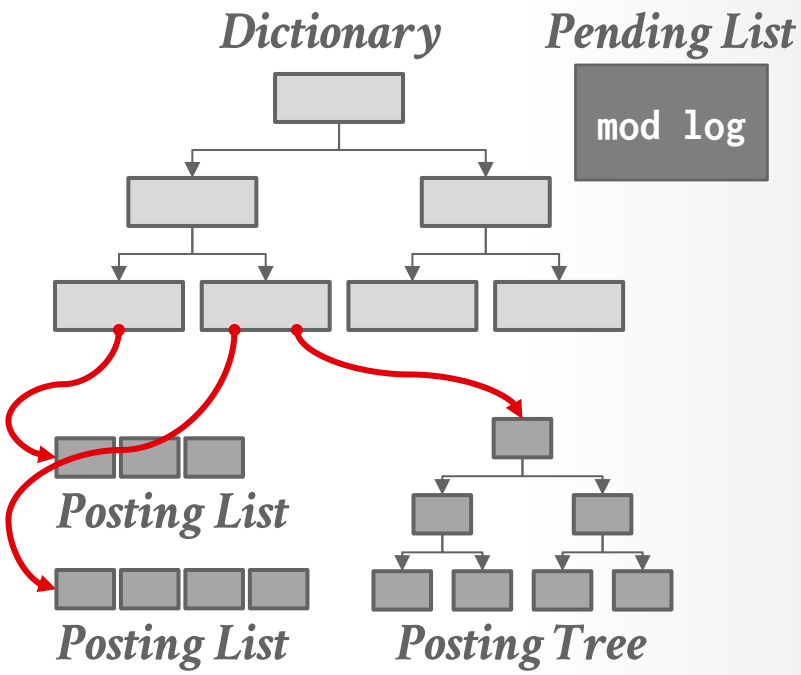

INVERTED INDEX: POSTGRESQL

PostgreSQL's **Generalized Inverted Index** (GIN) uses a B+Tree for the term dictionary that map to a posting list data structure.

Posting list contents varies depending on number of records per term:

→ **Few**: Sorted list of record ids.
→ **Many**: Another B+Tree of record ids.

Uses a separate "pending list" log to avoid incremental updates.

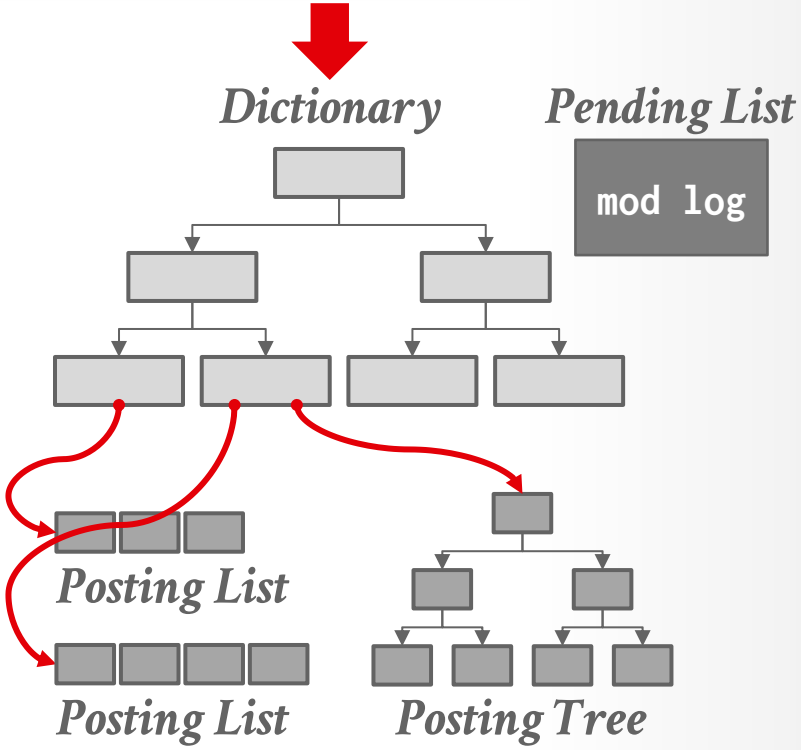

INVERTED INDEX: ENHANCEMENTS

Rankings: The DBMS can rank search results based on the frequency of terms in each record relative to other records.

→ Examples: TF-IDF, BM25

INVERTED INDEX: ENHANCEMENTS

Rankings: The DBMS can rank search results based on the frequency of terms in each record relative to other records.
→ Examples: TF-IDF, BM25

```
SELECT pageID FROM revisions
 WHERE content LIKE 'the';
```

```
SELECT pageID FROM revisions
 WHERE content LIKE 'Wu-Tang';
```

Tokenizers: Split terms into *n*-grams to support fuzzy text searches and autocomplete ("did you mean").
→ Examples: Elastic N-gram, pg_trgm

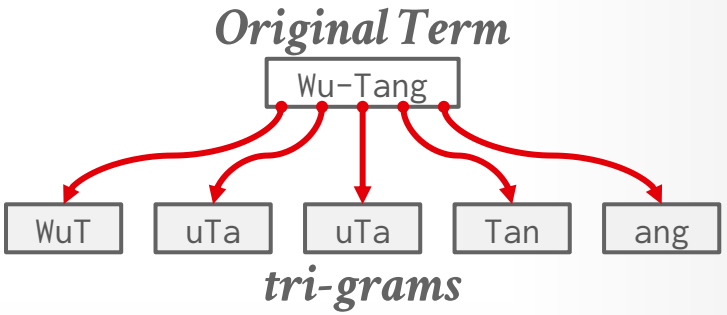

OBSERVATION

Inverted indexes search data based on its contents with some term tweaking based on linguistic models.
→ Example: Normalization ("**Wu-Tang**" matches "**Wu Tang**").

Instead of searching for records containing keywords (e.g., "**Wu-Tang**"), an application may want search for records that are <u>semantically</u> similar to topics (e.g., "hip-hop groups with songs about slinging").

SEMANTIC SIMILARITY SEARCH

Album(id, name, year, lyrics)

id	name	year	lyrics
Id1	Enter the Wu-Tang	1993	<text>
Id2	Run the Jewels 2	2015	<text>
Id3	Liquid Swords	1995	<text>
Id4	We Got It from Here	2016	<text>

OpenAI

Hugging Face

Transformer

Embeddings

```
Id1 → [0.32, 0.78, 0.30, ...]
Id2 → [0.99, 0.19, 0.81, ...]
Id3 → [0.01, 0.18, 0.85, ...]
Id4 → [0.19, 0.82, 0.24, ...]
⋮
```

Vector Index

SEMANTIC SIMILARITY SEARCH

Album(id, name, year, lyrics)

id	name	year	lyrics
Id1	Enter the Wu-Tang	1993	<text>
Id2	Run the Jewels 2	2015	<text>
Id3	Liquid Swords	1995	<text>
Id4	We Got It from Here	2016	<text>

OpenAI

Hugging Face

Transformer

Embeddings

```
Id1 → [0.32, 0.78, 0.30, ...]
Id2 → [0.99, 0.19, 0.81, ...]
Id3 → [0.01, 0.18, 0.85, ...]
Id4 → [0.19, 0.82, 0.24, ...]
⋮
```

Query

Find albums with lyrics about **running from the police**

[0.02, 0.10, 0.24, ...]

Vector Index

SEMANTIC SIMILARITY SEARCH

Album(id, name, year, lyrics)

id	name	year	lyrics
Id1	Enter the Wu-Tang	1993	<text>
Id2	Run the Jewels 2	2015	<text>
Id3	Liquid Swords	1995	<text>
Id4	We Got It from Here	2016	<text>

OpenAI

Hugging Face

Transformer

Embeddings

```
Id1 → [0.32, 0.78, 0.30, ...]
Id2 → [0.99, 0.19, 0.81, ...]
Id3 → [0.01, 0.18, 0.85, ...]
Id4 → [0.19, 0.82, 0.24, ...]
⋮
```

Query

Find albums with lyrics about **running from the police**

[0.02, 0.10, 0.24, ...]

Vector Index

Ranked List of Ids

SEMANTIC SIMILARITY SEARCH

Album(id, name, year, lyrics)

id	name	year	lyrics
Id1	Enter the Wu-Tang	1993	<text>
Id2	Run the Jewels 2	2015	<text>
Id3	Liquid Swords	1995	<text>
Id4	We Got It from Here	2016	<text>

OpenAI

Hugging Face

Transformer

Embeddings

```
Id1 → [0.32, 0.78, 0.30, ...]
Id2 → [0.99, 0.19, 0.81, ...]
Id3 → [0.01, 0.18, 0.85, ...]
Id4 → [0.19, 0.82, 0.24, ...]
⋮
```

Vector Index

SEMANTIC SIMILARITY SEARCH

Album(id, name, year, lyrics)

id	name	year	lyrics
Id1	Enter the Wu-Tang	1993	<text>
Id2	Run the Jewels 2	2015	<text>
Id3	Liquid Swords	1995	<text>
Id4	We Got It from Here	2016	<text>

OpenAI

Hugging Face

Transformer

Embeddings

```
Id1 → [0.32, 0.78, 0.30, ...]
Id2 → [0.99, 0.19, 0.81, ...]
Id3 → [0.01, 0.18, 0.85, ...]
Id4 → [0.19, 0.82, 0.24, ...]
⋮
```

Query

Find albums with lyrics about **running from the police** and released after **2005**

[0.02, 0.10, 0.24, ...]

year > 2005

Vector Index

VECTOR INDEXES

Specialized data structures to perform nearest-neighbor searches on embeddings (i.e., one-dimensional arrays of floating-point numbers).

→ May also need to filter data before / after vector searches.
→ Result correctness depends on whether the result "feels right".

Two approaches:

→ Inverted Indexes
→ Graphs

Pinecone Weaviate milvus drant nucliadb
marqo CloseVector VectorDB turbopuffer <(°O°)> BagelDB

VECTOR INDEXES

Specialized data structures to perform nearest-neighbor searches on embeddings (i.e., one-dimensional arrays of floating-point numbers).

→ May also need to filter data before / after vector searches.
→ Result correctness depends on whether the result "feels right".

Two approaches:

→ Inverted Indexes
→ Graphs

Pinecone Weaviate milvus drant nucliadb marqo CloseVector VectorDB turbopuffer <(°O°)> BagelDB

VECTOR SEARCH: INVERTED INDEXES

Partition vectors into smaller groups using a clustering algorithm and then build an inverted index that maps cluster centroids to records.

→ Preprocess / quantize vectors to reduce dimensionality.
→ Some implementations support incremental updates.
→ Examples: IVFFlat, pgVector

To find a match, use same clustering algorithm to map into a group, then scan that group's vectors.

→ Also check nearby groups to improve accuracy.

Source: Chi Zhang

VECTOR SEARCH: INVERTED INDEXES

Compute k-means clustering on embeddings to find centroids.

Assign each embedding to the cluster with its closest centroid.

Embeddings

```
Id1 → [0.32, 0.78, 0.30, ...]
Id2 → [0.99, 0.19, 0.81, ...]
Id3 → [0.01, 0.18, 0.85, ...]
Id4 → [0.19, 0.82, 0.24, ...]
⋮
```

VECTOR SEARCH: INVERTED INDEXES

Compute k-means clustering on embeddings to find centroids.

Assign each embedding to the cluster with its closest centroid.

Embeddings

```
Id1 → [0.32, 0.78, 0.30, ...]
Id2 → [0.99, 0.19, 0.81, ...]
Id3 → [0.01, 0.18, 0.85, ...]
Id4 → [0.19, 0.82, 0.24, ...]
⋮
```

Clusters

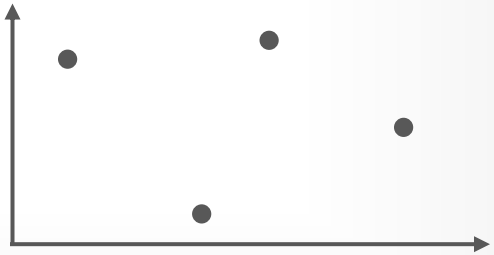

VECTOR SEARCH: INVERTED INDEXES

Compute k-means clustering on embeddings to find centroids.

Assign each embedding to the cluster with its closest centroid.

Embeddings

```
Id1 → [0.32, 0.78, 0.30, ...]
Id2 → [0.99, 0.19, 0.81, ...]
Id3 → [0.01, 0.18, 0.85, ...]
Id4 → [0.19, 0.82, 0.24, ...]
⋮
```

Clusters

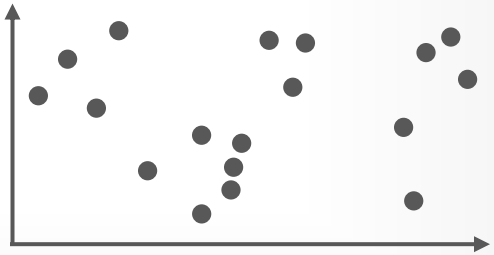

VECTOR SEARCH: INVERTED INDEXES

Compute k-means clustering on embeddings to find centroids.

Assign each embedding to the cluster with its closest centroid.

Embeddings

```
Id1 → [0.32, 0.78, 0.30, ...]
Id2 → [0.99, 0.19, 0.81, ...]
Id3 → [0.01, 0.18, 0.85, ...]
Id4 → [0.19, 0.82, 0.24, ...]
⋮
```

Clusters

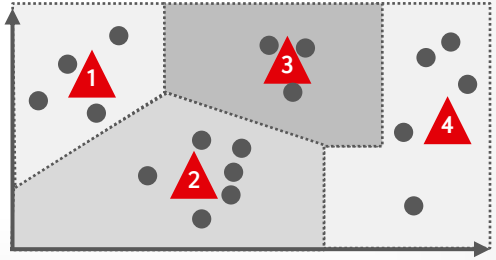

VECTOR SEARCH: INVERTED INDEXES

Compute k-means clustering on embeddings to find centroids.

Assign each embedding to the cluster with its closest centroid.

Build an inverted index mapping centroids to a posting list of the records in each cluster.

To find matches, compute centroid of closest cluster on search embedding and then evaluate posting list

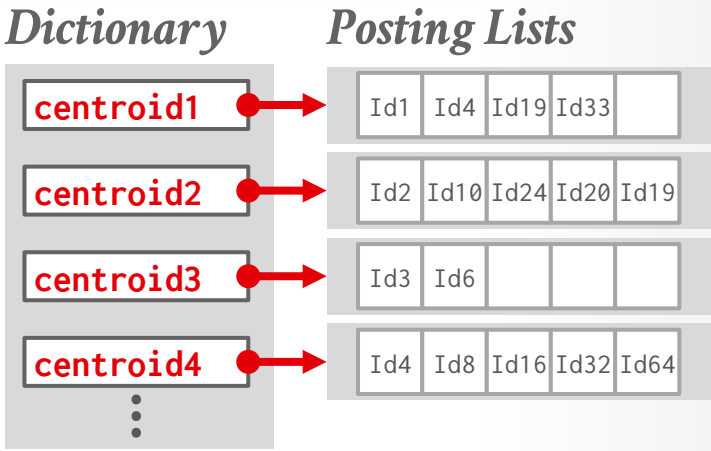

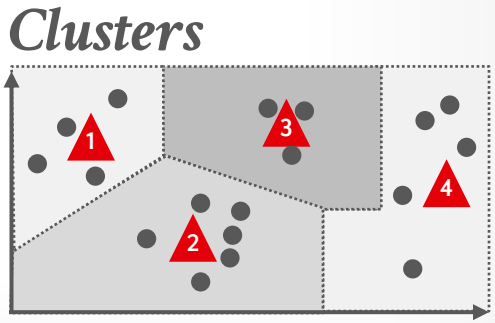

VECTOR SEARCH: GRAPH

Build a graph where each node represents a vector and it has edges to (at most) its ***n*** nearest neighbors.

→ Can use multiple levels of graphs (HNSW)

→ Examples: Faiss, hnswlib, DiskANN

To find a match for a given vector, enter the graph and then greedily choose the next edge that moves closer to that vector.

Vector Graph

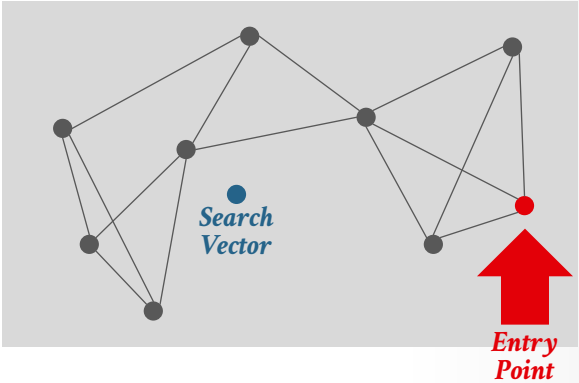

Source: Chi Zhang

VECTOR SEARCH: GRAPH

Build a graph where each node represents a vector and it has edges to (at most) its ***n*** nearest neighbors.

→ Can use multiple levels of graphs (HNSW)

→ Examples: Faiss, hnswlib, DiskANN

To find a match for a given vector, enter the graph and then greedily choose the next edge that moves closer to that vector.

Vector Graph

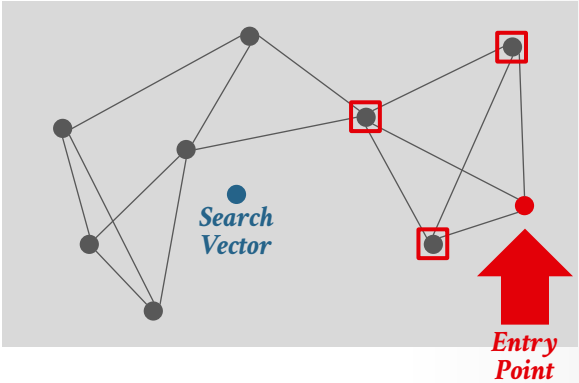

Source: Chi Zhang

VECTOR SEARCH: GRAPH

Build a graph where each node represents a vector and it has edges to (at most) its ***n*** nearest neighbors.

→ Can use multiple levels of graphs (HNSW)

→ Examples: Faiss, hnswlib, DiskANN

To find a match for a given vector, enter the graph and then greedily choose the next edge that moves closer to that vector.

Vector Graph

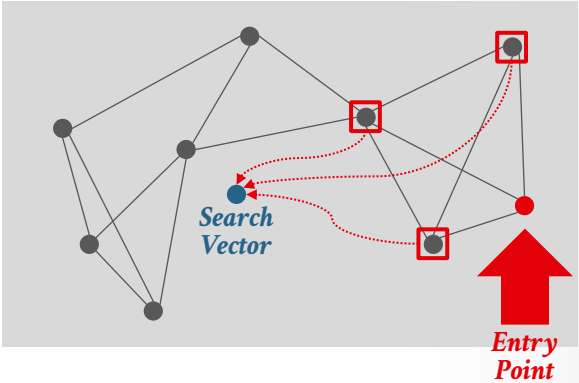

Source: Chi Zhang

VECTOR SEARCH: GRAPH

Build a graph where each node represents a vector and it has edges to (at most) its ***n*** nearest neighbors.

→ Can use multiple levels of graphs (HNSW)

→ Examples: Faiss, hnswlib, DiskANN

To find a match for a given vector, enter the graph and then greedily choose the next edge that moves closer to that vector.

Vector Graph

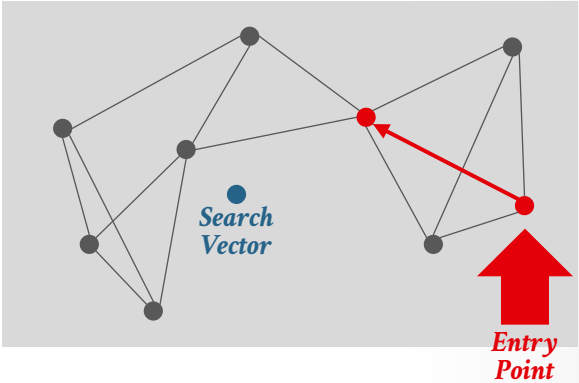

Source: Chi Zhang

VECTOR SEARCH: GRAPH

Build a graph where each node represents a vector and it has edges to (at most) its ***n*** nearest neighbors.

→ Can use multiple levels of graphs (HNSW)

→ Examples: Faiss, hnswlib, DiskANN

To find a match for a given vector, enter the graph and then greedily choose the next edge that moves closer to that vector.

Vector Graph

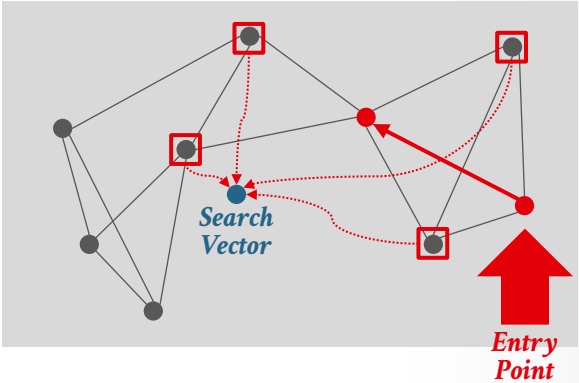

Source: Chi Zhang

VECTOR SEARCH: GRAPH

Build a graph where each node represents a vector and it has edges to (at most) its ***n*** nearest neighbors.

→ Can use multiple levels of graphs (HNSW)

→ Examples: Faiss, hnswlib, DiskANN

To find a match for a given vector, enter the graph and then greedily choose the next edge that moves closer to that vector.

Vector Graph

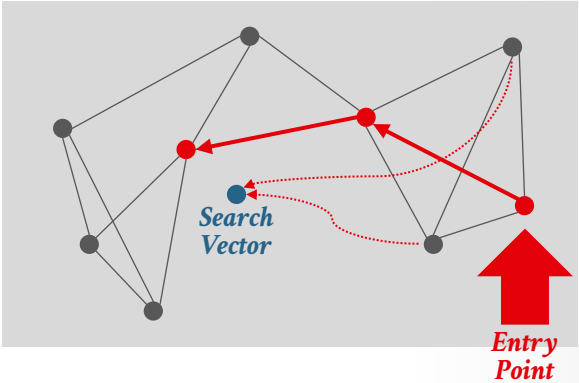

Source: Chi Zhang

VECTOR SEARCH: GRAPH

Build a graph where each node represents a vector and it has edges to (at most) its ***n*** nearest neighbors.

→ Can use multiple levels of graphs (HNSW)

→ Examples: Faiss, hnswlib, DiskANN

To find a match for a given vector, enter the graph and then greedily choose the next edge that moves closer to that vector.

Hierarchical Graph

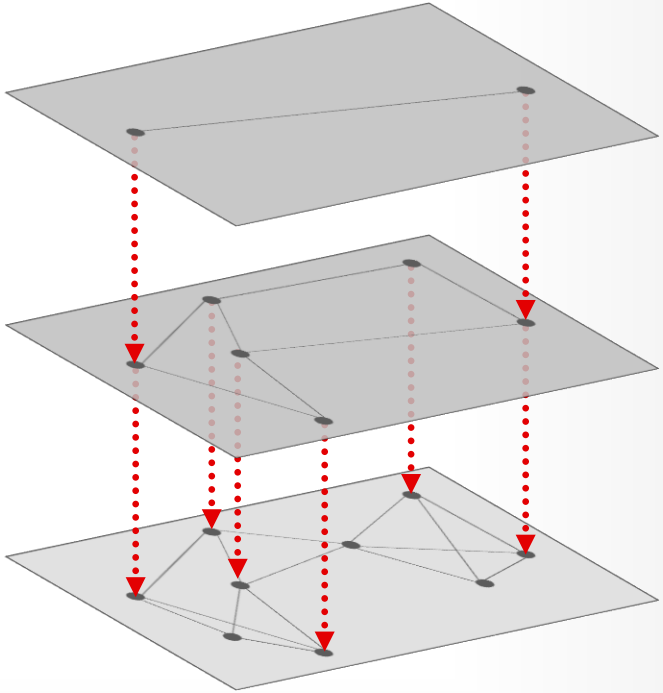

VECTOR SEARCH: GRAPH

Build a graph where each node represents a vector and it has edges to (at most) its ***n*** nearest neighbors.

→ Can use multiple levels of graphs (HNSW)

→ Examples: Faiss, hnswlib, DiskANN

To find a match for a given vector, enter the graph and then greedily choose the next edge that moves closer to that vector.

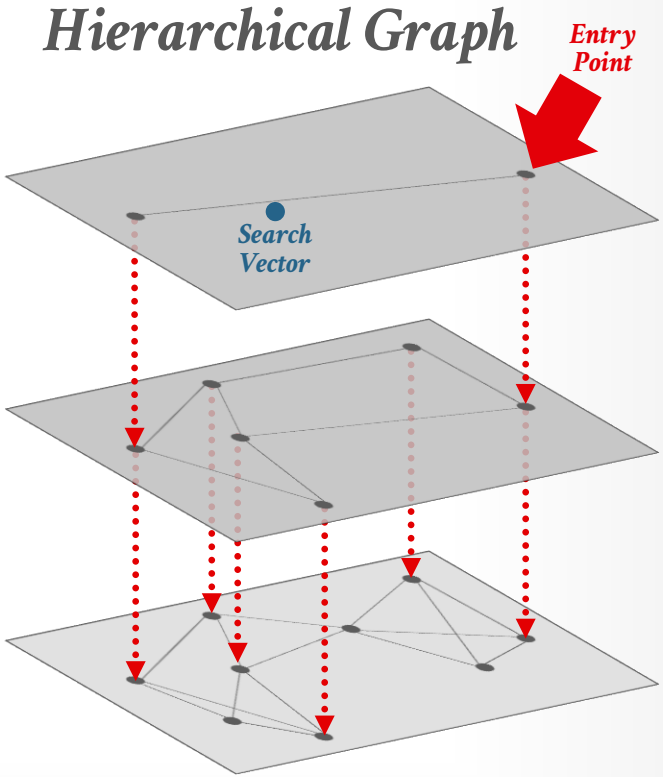

VECTOR SEARCH: GRAPH

Build a graph where each node represents a vector and it has edges to (at most) its ***n*** nearest neighbors.

→ Can use multiple levels of graphs (HNSW)

→ Examples: Faiss, hnswlib, DiskANN

To find a match for a given vector, enter the graph and then greedily choose the next edge that moves closer to that vector.

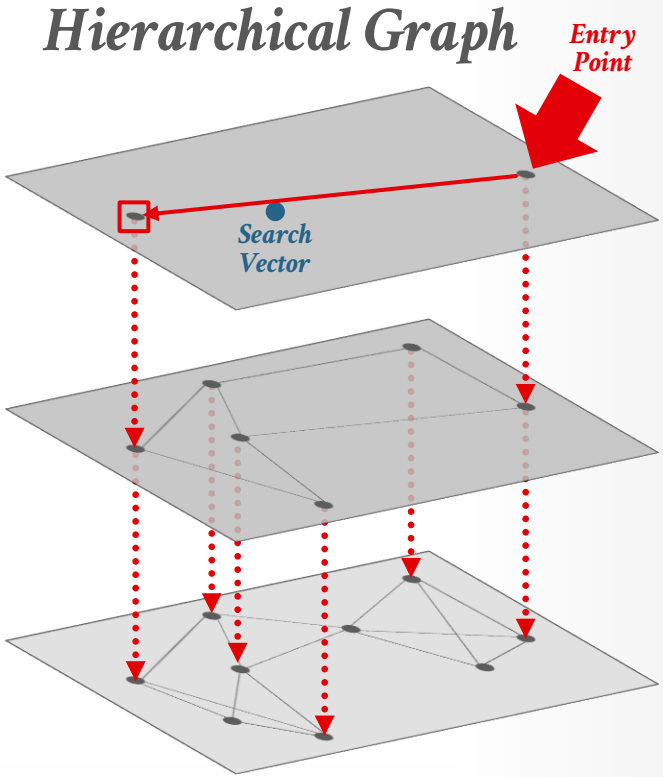

VECTOR SEARCH: GRAPH

Build a graph where each node represents a vector and it has edges to (at most) its ***n*** nearest neighbors.

→ Can use multiple levels of graphs (HNSW)

→ Examples: Faiss, hnswlib, DiskANN

To find a match for a given vector, enter the graph and then greedily choose the next edge that moves closer to that vector.

Hierarchical Graph

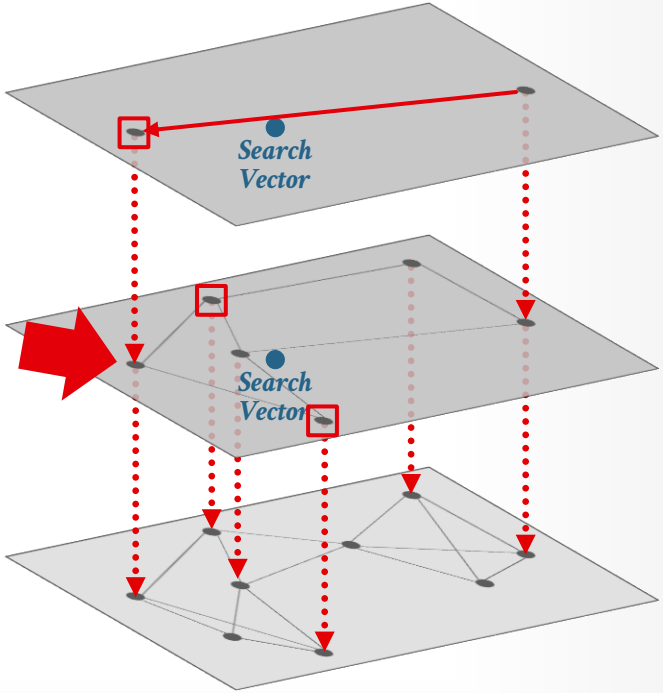

VECTOR SEARCH: GRAPH

Build a graph where each node represents a vector and it has edges to (at most) its ***n*** nearest neighbors.

→ Can use multiple levels of graphs (HNSW)

→ Examples: Faiss, hnswlib, DiskANN

To find a match for a given vector, enter the graph and then greedily choose the next edge that moves closer to that vector.

Hierarchical Graph

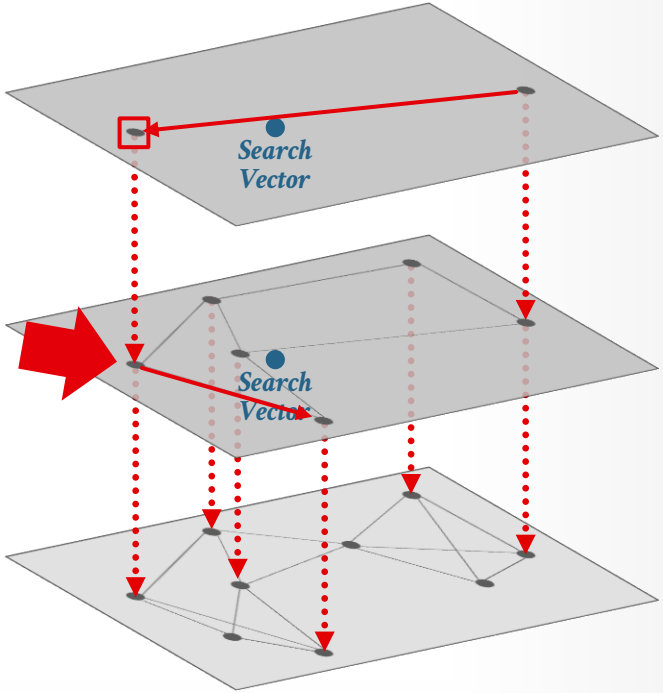

VECTOR SEARCH: GRAPH

Build a graph where each node represents a vector and it has edges to (at most) its ***n*** nearest neighbors.

→ Can use multiple levels of graphs (HNSW)

→ Examples: Faiss, hnswlib, DiskANN

To find a match for a given vector, enter the graph and then greedily choose the next edge that moves closer to that vector.

Hierarchical Graph

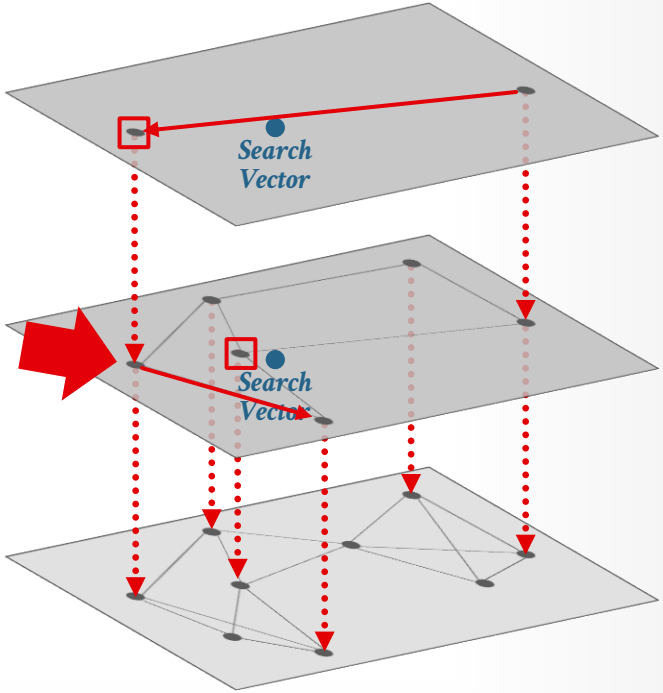

VECTOR SEARCH: GRAPH

Build a graph where each node represents a vector and it has edges to (at most) its ***n*** nearest neighbors.

→ Can use multiple levels of graphs (HNSW)

→ Examples: Faiss, hnswlib, DiskANN

To find a match for a given vector, enter the graph and then greedily choose the next edge that moves closer to that vector.

Hierarchical Graph

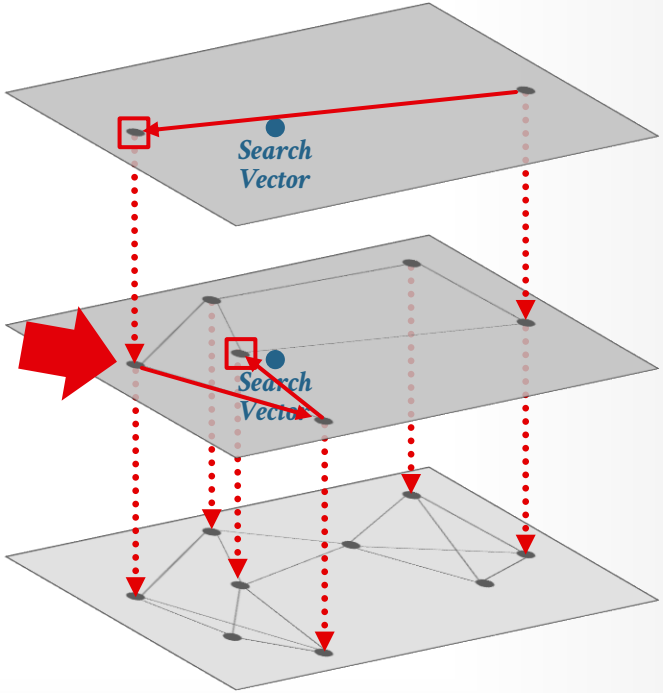

VECTOR SEARCH: GRAPH

Build a graph where each node represents a vector and it has edges to (at most) its ***n*** nearest neighbors.

→ Can use multiple levels of graphs (HNSW)

→ Examples: Faiss, hnswlib, DiskANN

To find a match for a given vector, enter the graph and then greedily choose the next edge that moves closer to that vector.

Hierarchical Graph

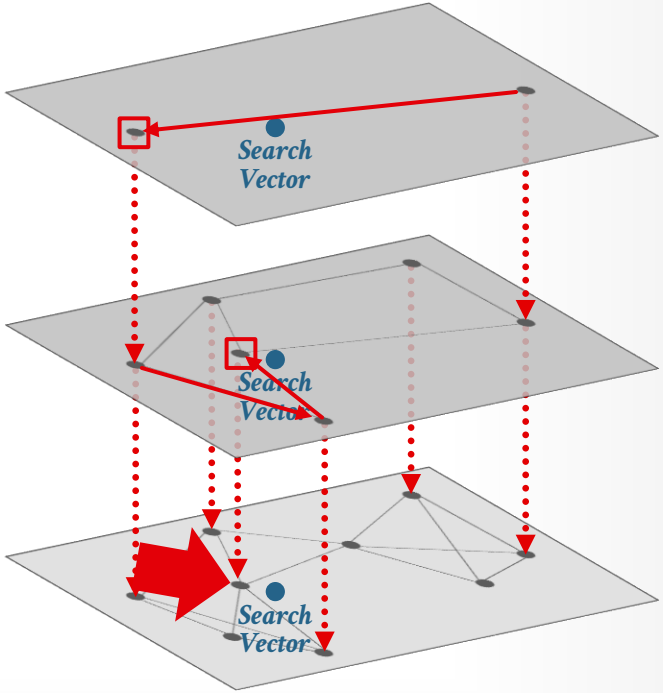

PARTIAL INDEXES

Create an index on a subset of the entire table. This potentially reduces its size and the amount of overhead to maintain it.

```
CREATE INDEX idx_foo
          ON foo (a, b)
       WHERE c = 'WuTang';
```

One common use case is to partition indexes by date ranges.

→ Create a separate index per month, year.

PARTIAL INDEXES

Create an index on a subset of the entire table. This potentially reduces its size and the amount of overhead to maintain it.

One common use case is to partition indexes by date ranges.
→ Create a separate index per month, year.

```
CREATE INDEX idx_foo
          ON foo (a, b)
       WHERE c = 'WuTang';
```

```
SELECT b FROM foo
 WHERE a = 123
   AND c = 'WuTang';
```

PARTIAL INDEXES

Create an index on a subset of the entire table. This potentially reduces its size and the amount of overhead to maintain it.

One common use case is to partition indexes by date ranges.
→ Create a separate index per month, year.

```
CREATE INDEX idx_foo
          ON foo (a, b)
       WHERE c = 'WuTang';
```

```
SELECT b FROM foo
 WHERE a = 123
```

INDEX INCLUDE COLUMNS

Embed additional columns in indexes to support index-only queries.

These extra columns are only stored in the leaf nodes and are not part of the search key.

```
CREATE INDEX idx_foo
          ON foo (a, b)
     INCLUDE (c);
```

```
SELECT b FROM foo
 WHERE a = 123
   AND c = 'WuTang';
```

INDEX INCLUDE COLUMNS

Embed additional columns in indexes to support index-only queries.

These extra columns are only stored in the leaf nodes and are not part of the search key.

```
CREATE INDEX idx_foo
          ON foo (a, b)
     INCLUDE (c);
```

```
SELECT b FROM foo
 WHERE a = 123
   AND c = 'WuTang';
```

INDEX INCLUDE COLUMNS

Embed additional columns in indexes to support index-only queries.

These extra columns are only stored in the leaf nodes and are not part of the search key.

```
CREATE INDEX idx_foo
        ON foo (a, b)
     INCLUDE (c);
```

```
SELECT b FROM foo
 WHERE a = 123
   AND c = 'WuTang';
```

INDEX INCLUDE COLUMNS

Embed additional columns in indexes to support index-only queries.

These extra columns are only stored in the leaf nodes and are not part of the search key.

```
CREATE INDEX idx_foo
        ON foo (a, b)
   INCLUDE (c);

SELECT b FROM foo
 WHERE a = 123
   AND c = 'WuTang';
```

INDEX INCLUDE COLUMNS

Embed additional columns in indexes to support index-only queries.

These extra columns are only stored in the leaf nodes and are not part of the search key.

If all attributes a query needs are available in an index, then the DBMS does not need to retrieve the tuple.
→ AKA covering index or index-only scans.

```
CREATE INDEX idx_foo
        ON foo (a, b)
   INCLUDE (c);

SELECT b FROM foo
 WHERE a = 123
   AND c = 'WuTang';
```

NEXT CLASS

How to make indexes thread-safe!