BI / read / 17

query	BI / read / 17
title	Information propagation analysis
pattern	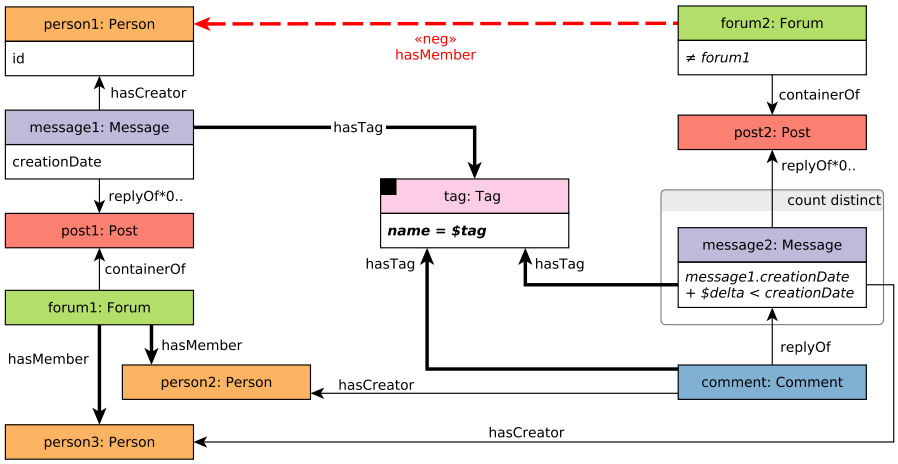
desc.	This query aims to identify instances of "information propagation" when a Person (`person1`) submits a Message (`message1`) with a given Tag (`tag`) to a Forum (`forum1`). This is read by other members of `forum1`, Persons `person2` and `person3`. Some time later (specified by the `delta` parameter), these persons have a discussion with the same `tag` in a different Forum (`forum2`) where `person1` is not a member. The discussion consists of a Message (`message2`) by `person2` and a direct reply Comment (`comment`) by `person3`. Return IDs of `person1` with the number of interactions their Messages (might have) caused.
params	
result	
sort	
limit	10
CPs	2.1, 2.3, 8.1

1	tag	Long String	Tags with a similar amount of Messages are selected
2	delta	32-bit Integer	Measured in hours, selected to be between 8 and 16 hours.

1	person1.id	ID	R	
2	messageCount	32-bit Integer	A	

1	messageCount	↓	
2	person1.id	↑	