10.5 Gbps Visible Light Communication Systems Based on *C*-Plane Freestanding GaN Micro-LED

Zhiwei Rao, Xinyi Shan, Guobin Wang, Zuxin Jin, Runze Lin, Xugao Cui, Ran Liu, Ke Xu, and Pengfei Tian, *Senior Member, IEEE*

***Abstract*—In this paper, 10.5 Gbps visible light communication systems based on a single *c*-plane freestanding GaN micro-LED are presented. We investigate the size effect on blue GaN-substrate micro-LED from optoelectronic properties to communication performance. Larger-size micro-LED can obtain higher light output power (LOP), but smaller-size micro-LED can achieve higher modulation bandwidth. An ultra-high −3 dB bandwidth of ∼ 2.3 GHz was obtained by 20 μm micro-LED. Meanwhile, we further improved the OFDM signal bandwidth to effectively utilize the high bandwidth of GaN-substrate micro-LED, and the maximum data rates of 20, 40, 60, 80, 100, and 300 μm micro-LEDs are 8.294, 8.394, 10.547, 10.019, 9.398, and 7.294 Gbps, respectively. 60 μm micro-LED has the potential to balance the LOP and bandwidth to achieve a record data rate of 10.547 Gbps, which is the highest data rate obtained by a single micro-LED to the best of our knowledge. Based on the optimum size of 60 μm micro-LED, extended distances of 0.5, 1, 5, and 10 m with data rates of 10.045, 9.668, 9.277, and 8.649 Gbps are also presented.**

***Index Terms*—*c*-plane GaN freestanding substrate, micro-LED, VLC.**

I. Introduction

ADVANCES in the Internet of Things, virtual reality/augmented reality, and artificial intelligence have generated a massive volume of data, which has driven up the demand for 6 G communication with high data rate, low latency and ultra-high capacity [1]. Visible light communication (VLC) with unlicensed spectrum circumvents the limited spectrum of radio frequency (RF), and provides unique advantages of large capacity channel, high data rate and high security, which has been expected to be an important part of 6G [2]. Among the transmitters in VLC systems, micro-LEDs are renowned for their spectacular performances with high efficiency, high modulation bandwidth and low power consumption. Especially in recent years, micro-LEDs have been extensively studied in the VLC application [3], [4], [5], [6], [7], [8], [9]. Whereas to meet the requirement of the higher data rate of 6 G communication, it is essential to improve the data rate of micro-LEDs.

Several studies have explored approaches to improve the data rate of micro-LEDs. By employing a 3×3 series-biased blue micro-LED array and orthogonal frequency division multiplex (OFDM) modulation format, up to 11.74 Gbps data rate has been achieved [3]. Jin et al. have proposed a 3×3 violet series-biased micro-LED with high light output power (LOP) and used a distance adaptive pre-equalization strategy to obtain the data rate of 10.23 Gbps at 0.2 m [4]. The current data rate of micro-LEDs has been capable to break 10 Gbps, but the way of breaking 10 Gbps is mainly based on the series-connected micro-LEDs. To date, there is a current paucity of research achieving over 10 Gbps data rate by a single micro-LED. A violet single micro-LED with high LOP is reported to achieve a high data rate of 7.91 Gbps [5]. This violet single micro-LED also presented the data rate of 11.95 Gbps under the condition that the nonlinear distortion noise of the micro-LED is the major source of noise in the system. The reported highest data rate is 8.75 Gbps, using a blue single wetting layer micro-LED with high bandwidth [6]. Our previous work has compared blue micro-LEDs fabricated on *c*-plane freestanding GaN substrate and sapphire substrate and revealed the potential advantages of freestanding GaN micro-LED in VLC application [7]. Compared with sapphire-substrate micro-LED, GaN-substrate micro-LED has much lower threading dislocation density (TDD) and better heat dissipation, which provide GaN-substrate micro-LED with higher LOP. Besides, the low strain in the epitaxial layer of the GaN substrate results in less quantum-confined Stark effect (QCSE) in micro-LEDs, thus potentially accelerating carrier radiative recombination and thereby increasing bandwidth. Furthermore, size effect has been proved to have an influence on the optoelectronic performance of micro-LED, such as the electrical characteristics, LOP density and external quantum efficiency (EQE) [11], [12]. Reducing the size of LED can sustain higher current density and obtain higher LOP density as well as higher modulation bandwidth [11], [12]. And smaller-size LED has higher EQE at high operating currents. However, the limited LOP of smaller-size LED may further affect the communication

Manuscript received 29 August 2023; revised 4 January 2024; accepted 1 February 2024. Date of publication 8 February 2024; date of current version 8 July 2024. This work was supported in part by the National Key Research and Development Program of China under Grant 2021YFE0105300, in part by the Science and Technology Commission of Shanghai Municipality under Grant 23ZR1405700, and in part by Leading-edge Technology Program of Jiangsu Natural Science Foundation under Grant BE2021008-2. *(Zhiwei Rao and Xinyi Shan contributed equally to this work.) (Corresponding author: Pengfei Tian.)*

Zhiwei Rao, Xinyi Shan, Zuxin Jin, Runze Lin, Xugao Cui, Ran Liu, and Pengfei Tian are with the School of Information Science and Technology, Fudan University, Shanghai 200433, China (e-mail: 21210720213@m.fudan.edu.cn; 19110720037@fudan.edu.cn; 20210720252@fudan.edu.cn; 21110720025@m.fudan.edu.cn; cuixugao@fudan.edu.cn; rliu@fudan.edu.cn; pftian@fudan.edu.cn).

Guobin Wang and Ke Xu are with the Suzhou Institute of Nano-Tech and Nano-Bionics, Chinese Academy of Sciences, Jiangsu Institute of Advanced Semiconductors, Suzhou 215123, China (e-mail: gbwang2009@sinano.ac.cn; kxu2006@sinano.ac.cn).

Color versions of one or more figures in this article are available at https://doi.org/10.1109/JLT.2024.3363729.

Digital Object Identifier 10.1109/JLT.2024.3363729

0733-8724 © 2024 IEEE. Personal use is permitted, but republication/redistribution requires IEEE permission.
See https://www.ieee.org/publications/rights/index.html for more information.

Authorized licensed use limited to: FUDAN UNIVERSITY. Downloaded on December 05,2024 at 12:43:29 UTC from IEEE Xplore. Restrictions apply.

TABLE I
SUMMARY OF MICRO-LED BASED HIGH-SPEED VLC SYSTEM IN RECENT YEARS

Year	LED Type	Size	Data Rate	Bandwidth	Distance	Modulation Scheme	Ref.
2020	Blue micro-LED (series connection, 3×3)	20 μm	11.74 Gbps @ 8.12 kA/cm^2	980 MHz @ 11.15 kA/cm^2 (E-O)	3 m	OFDM	[3]
2023	Violet micro-LED (series connection, 3×3)	20 μm	10.23 Gbps @ 6 kA/cm^2	350 MHz @ 6 kA/cm^2 (E-O)	0.2 m	OFDM	[4]
2017	Violet micro-LED (single-pixel)	40 μm	7.91 Gbps @ 30 mA	655 MHz @ 50 mA (E-O)	0.275 m	OFDM	[5]
2021	Blue micro-LED (single-pixel)	75 μm	8.75 Gbps @ 584 A/cm^2	1025 MHz @ 140 A/cm^2 (E-O)	0.08 m	OFDM	[6]
2022	UVC micro-LED (single-pixel)	40 μm	6.94 Gbps @ 20 mA	960 MHz @ 6 mA (E-E)	10 m	OFDM	[9]
2023	Green micro-LED (single-pixel)	80 μm	6.04 Gbps @ 85 mA	320 MHz @ 85 mA (E-O)	0.25 m	OFDM	[10]
2023	**Blue micro-LED (single-pixel)**	**60 μm**	**10.547 Gbps @ 10.8 kA/cm^2** **8.649 Gbps @ 10.8 kA/cm^2**	**2.3 GHz @ 42.5 kA/cm^2 (E-O)**	**0.2 m** **10 m**	**OFDM**	**This Work**

performance. Our previous work also revealed that an appropriate size of micro-LED could obtain the optimal energy efficiency for UVC communication [13]. Meanwhile, with the ever-grown demand of higher data throughput for 6 G communication, it is vital to develop multiple-input multiple-output (MIMO) system with high performance LED arrays. Therefore, considering the balance of LOP and modulation bandwidth for micro-LED, it is essential to explore appropriate size of single micro-LED pixel towards high-speed VLC application.

To better apply the GaN-substrate micro-LED in VLC, in this work, we investigate the size effect on the optoelectronics and communication performances of the blue micro-LED on *c*-plane freestanding GaN substrate. LED pixels with mesa sizes of 20, 40, 60, 80, 100, and 300 μm have been fabricated. And the measured optoelectronic performances shows that the larger-size LED could achieve higher LOP, but the smaller-size micro-LED could achieve higher modulation bandwidth. The highest -3 dB bandwidth among these sizes is $\sim$2.3 GHz achieved by 20 μm micro-LED. Furthermore, we improve the OFDM signal bandwidth to effectively utilize the high bandwidth of freestanding GaN micro-LED. The achieved data rates of the 20, 40, 60, 80, 100, and 300 μm freestanding GaN LEDs are 8.294, 8.394, 10.547, 10.019, 9.398, and 7.294 Gbps, respectively. 60 μm freestanding GaN micro-LED achieves the highest data rate of 10.547 Gbps, which is also the highest data rate achieved by a single micro-LED. We further extend the distance of 60 μm freestanding GaN micro-LED and use adaptive pre-equalization to achieve optimal equalization for different channels. Data rates of 10.045, 9.668, 9.277, and 8.649 Gbps at different distances of 0.5, 1, 5, and 10 m are achieved. Table I summarizes the modulation bandwidths and VLC performances of different high-speed micro-LED in recent studies.

II. SIZE-DEPENDENT OPTOELECTRONIC PERFORMANCE

The LED epitaxial wafer emitted at 450 nm was grown on the 2-inch *c*-plane freestanding GaN substrate by metal organic chemical vapor deposition, mainly containing a Si-doped n-GaN layer, two-period InGaN/GaN multiple quantum wells (MQW) active layers, a AlGaN electron blocking layer and a Mg-doped p-GaN layer. It is considered that the reduced period of MQW could improve the radiative recombination of carriers [14] and enhance the hole injection efficiency [15], thus improving the modulation bandwidth of LEDs.

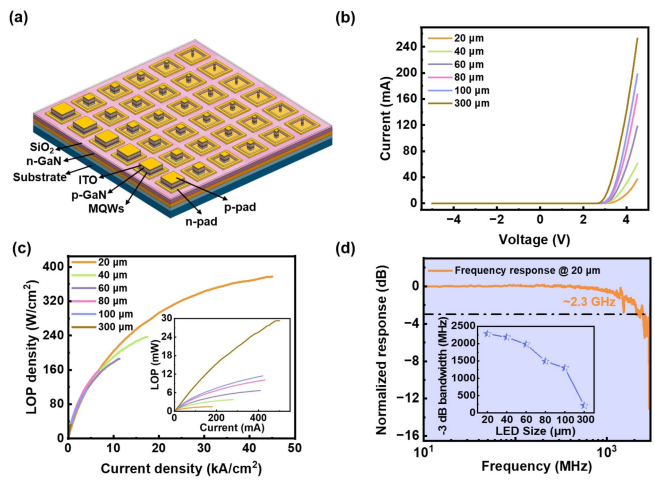

Fig. 1. (a) Schematic diagram of the different-size LEDs. Size-dependent (b) I–V, (c) LOP density versus current density of different-size LEDs (insets: P-I curves). (d) The typical frequency response of 20 μm micro-LED. The insets are the maximum –3 dB bandwidths of different-size LEDs.

To investigate the size-dependent performance of the *c*-plane freestanding GaN LEDs, LED pixels with mesa sizes of 20, 40, 60, 80, 100, and 300 μm were obtained by standard device fabrication processes, as shown in Fig. 1(a), which were similar to our previous work [16]. The size-dependent current versus voltage (I-V) characteristics are presented in Fig. 1(b), showing that larger-size freestanding GaN LED has a higher current at the same applied voltage due to the size-dependent series resistance. The LOP characteristics were measured by an integrating sphere (IS-25-LED). From the LOP density versus current density curves shown in Fig. 1(c), it can be found that smaller-size freestanding GaN micro-LED could sustain much higher current density than larger-size LED, which may favor obtaining a high bandwidth for application in high-speed VLC. And the size-dependent injection current density can be attributed to the more uniform current spreading of smaller-size micro-LED [17]. The more uniform current spreading and better heat dissipation of smaller-size LEDs enhance the efficiency at high current densities, offering great advantages for applications in VLC. Furthermore, the inset in Fig. 1(c) presents the LOP versus current (P-I) characteristics of different-size LEDs, exhibiting that larger-size LEDs have the advantage of higher LOP. The

Authorized licensed use limited to: FUDAN UNIVERSITY. Downloaded on December 05,2024 at 12:43:29 UTC from IEEE Xplore. Restrictions apply.

higher LOP of larger-size LEDs may be conducive to improving the signal-to-noise ratio (SNR) for the application of VLC [3].

Since the modulation bandwidth is the key characteristic for VLC application, we then further measured the frequency response of different-size freestanding GaN LEDs. A vector network analyzer (VNA, E5071 C) was used to generate an AC signal, which was combined with a DC signal through a bias-tee (Mini-circuit ZFBT-6GW) to drive the different-size freestanding GaN LEDs. The emitted blue light from the freestanding GaN LED was then collimated and focused into an optical fiber by a lens. Finally, the emitted blue light transmitted by the optical fiber was detected by a PIN photodetector (SPD-4, 3 GHz) and then fed to the VNA. We extracted the maximum -3 dB bandwidth obtained by each size of LED, as shown in the inset of Fig. 1(d). It should be noted that the -3 dB bandwidth mentioned in the article refers to the -3 dB optical bandwidth (E-O bandwidth, corresponding to -6 dB E-E bandwidth). The maximum -3 dB bandwidths of 20, 40, 60, 80, 100, and 300 μm freestanding GaN LEDs obtained are 2286, 2185, 1982, 1493, 1296, and 209.5 MHz, respectively, with the corresponding current density of 42.5, 15, 10, 7, 5, and 0.6 kA/cm ^{2}, respectively. Freestanding GaN LED with the chip size of 20 μm achieves the highest modulation bandwidth among these different sizes, and the frequency response of 20 μm micro-LED is exhibited in Fig. 1(d). The size-dependent modulation bandwidth characteristics indicate that smaller-size LEDs could obtain higher modulation bandwidth. This can be explained by the fact that the more uniform current spreading within the smaller-size LED allows it to carry higher current density, and resulting in a shorter carrier lifetime.

The modulation bandwidth and LOP of LEDs are both vital factors for VLC. As indicated previously, smaller-size LEDs could obtain higher modulation bandwidth but larger-size LEDs could achieve higher LOP. This size-dependent communication characteristic also exists in deep-UV micro-LEDs [13]. Therefore, there exists an optimum size of GaN-substrate LED to balance LOP and modulation bandwidth for higher transmission data rate, which will be described in the later communication performance test.

III. Size Dependent VLC Performance

In the VLC system shown in Fig. 2, we employed micro-LEDs of various sizes as the transmitter of the VLC system. A free-space VLC system with a transmission distance of 0.2 m was established by employing the OFDM modulation scheme. The OFDM data generated by the MATLAB program was uploaded to an arbitrary waveform generator (AWG, Keysight M8190 A, 12 GS/s) from the transmitter (Tx) module with the AWG sampling rate of 8 GS/s. A 38 dB electrical amplifier (Mini-Circuits, ZHL-42W+, 4.2 GHz) was used to amplify the output signal and then combined with a DC signal via a bias-tee (Mini-circuit ZFBT-6GW) to drive the micro-LED. The optical signal emitted from the micro-LED after modulation was collimated and focused into a 1.4 GHz PIN photodiode (Femto, 1.4 GHz) to convert the optical signal into an electrical signal. The receiving end used a 1.4 GHz PIN photodetector with higher responsivity to improve data rate. The high-speed digital signal analyzer (DSA, Agilent DSA90604 A Infiniium 20 GS/s) captured and recorded the output signal of the receiver, which was finally demodulated through the receiver (Rx) module.

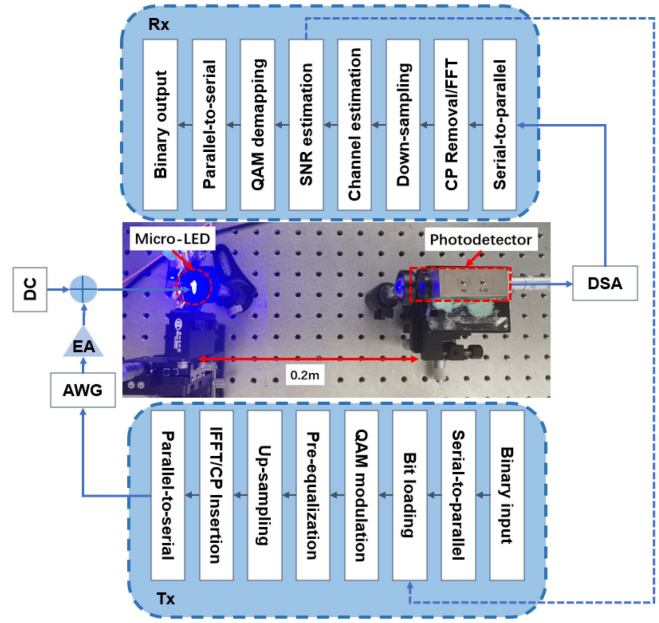

Fig. 2. Schematic diagram of the experimental setup of the VLC system.

Pre-equalization and bit loading were used to modulate and demodulate OFDM signals to improve channel capacity. The Tx module first generated a large number of binary data sequences, which were converted from serial to parallel and mapped to binary phase shift keying (BPSK) signals for estimating the frequency response and subcarrier SNR of the channel. Whereas, the obtained frequency response was uneven at different frequencies. Therefore, bit loading technique was then used to solve the nonuniform SNR distribution, so as to improve channel utilization. In order to improve the utilization of the high-frequency part, pre-equalization was adopted for OFDM signals, which allocated more energy to the high-frequency part. We further extended the distance of the VLC system, and different pre-equalization factors were adopted for different channels, so as to obtain the optimal equalization degree for specific channel [4]. After up-sampling the signal was converted into a real-value signal through Hermitian symmetry and inverse fast Fourier transform (IFFT). Then, a cyclic prefix (CP) with a length of 1/32 N_{FFT} was added to insert the protection interval and eliminate inter-symbol interference (ISI). Finally, the time domain OFDM signal converted from parallel to serial was sent to the AWG, which used a sampling rate of 8 GS/s to fully utilize the device bandwidth. In the Rx module, the signal underwent serial conversion to parallel, removing CP and FFT, down-sampling, channel estimation, quadrature amplitude modulation (QAM) demapping, and parallel conversion to serial. The signal was converted to binary data and demodulated in MATLAB [18]. The bit error rate (BER), SNR, constellation, spectral efficiency, and other information could be obtained from the demodulation results. And the data rate of GaN-substrate LED could be calculated by multiplying the signal modulation bandwidth and spectral efficiency [19].

Authorized licensed use limited to: FUDAN UNIVERSITY. Downloaded on December 05,2024 at 12:43:29 UTC from IEEE Xplore. Restrictions apply.

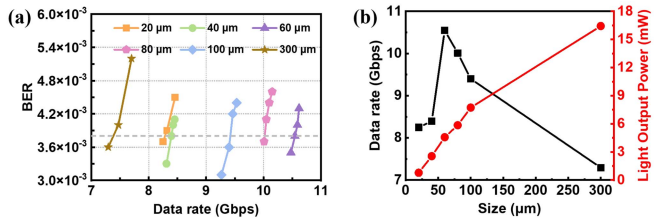

Fig. 3. (a) BER versus data rate curves of different size micro-LEDs. (b) Data rate and LOP versus micro-LED size curves.

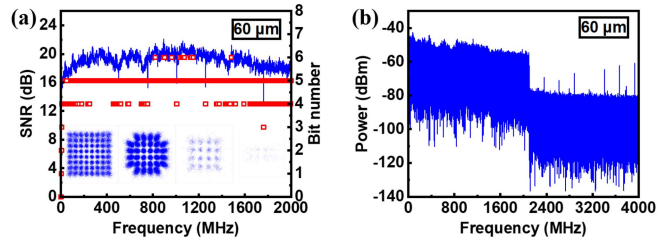

Fig. 4. (a) SNR of 60 μm micro-LED versus signal bandwidth, bit distribution, and constellation plot. (b) The power spectrum of 60 μm micro-LED OFDM signal.

To obtain the maximum data rate of each sized micro-LED system at a distance of 0.2 m, the signal bandwidth is increased to 2 GHz by the implementation of pre-equalization. And the optimum operating conditions of each sized LED were also searched. Under the optimal bias current and peak-to-peak voltage (V_{pp}) of each sized LED, the channel subcarrier of each frequency was bit-loaded, and finally, the signal bandwidth and spectral efficiency were multiplied together to obtain the optimal transmission data rate. It should be noted that high bandwidth and optical power of freestanding micro-LEDs, enable higher signal bandwidth and energy of VLC system. This improves the SNR and spectral efficiency, ultimately achieving higher data rates.

Fig. 3(a) shows the BER versus data rate curves of different-size freestanding GaN LEDs, and the size-dependent data rates and Rx LOP of GaN-substrate LEDs are presented in Fig. 3(b). It can be observed that there exists an optimum size of GaN-substrate LED to get a higher transmission data rate, and 60 μm GaN-substrate micro-LED achieves the highest data rate of 10.547 Gbps among these sizes below the forward error correction (FEC) limit. The corresponding spectral efficiency of 60 μm micro-LED reaches 5.274 b/s/Hz. To the best of our knowledge, this is also the highest data rate obtained by a single micro-LED which exceeds 10 Gbps for the first time. As previously stated, the modulation bandwidth and LOP have joint influences on the transmission performance. It can be noted that the optimal current density of each sized micro-LED in VLC measurements is close to the current density corresponding to its maximum bandwidth. The result, indicates that the modulation bandwidth of the freestanding GaN micro-LED is utilized to a large extent during VLC measurements. Also, the results suggest that freestanding GaN micro-LED has great advantages of sustaining ultra-high current density. In addition, larger-size LED has higher LOP at Rx, with the value of 0.781, 2.55, 4.57, 5.58, 7.73, and 17.43 mW for 20, 40, 60, 80, 100, and 300 μm respectively. And the LOPs at Rx were measured by placing the optical power meter (Thorlabs PM100) close to the LEDs. Therefore, there exists an optimum size of freestanding GaN LED to balance LOP and modulation bandwidth for a higher transmission data rate. Simultaneously, the SNR depends on the average SNR and LOP at Rx. The average SNR shows a trend of first increasing and then decreasing as the size increases, with values of 15.83, 15.64, 19.09, 18.60, 17.65, and 12.47 dB, respectively. At this time, the spectral efficiency is 4.147, 4.197, 5.274, 5.010, 4.699, and 3.647 b/s/Hz, respectively. The spectral efficiency of 60 μm is the highest, so it also has the highest communication rate. Fig. 4(a) shows the SNR distribution and bit distribution of 60 μm GaN-substrate micro-LED on the channel subcarrier, where the QAM constellation plot of different orders is also illustrated, and the power spectrum of the OFDM signal using pre-equalization is shown in Fig. 4(b). Table II summarizes the communication performance of different-size LEDs under their corresponding optimal operating conditions. As the size increases from 20 μm to 300 μm, the maximum rates are 8.294, 8.394, 10.547, 10.019, 9.398, and 7.294 Gbps, respectively.

TABLE II
COMMUNICATION PERFORMANCE OF DIFFERENT-SIZE LEDS UNDER THEIR CORRESPONDING OPTIMAL OPERATING CONDITIONS

Chip size (μm)	20	40	60	80	100	300
Bias current density (kA/cm^2)	42.5	15.6	10.8	6.4	4.1	0.36
Maximum data rate (Gbps)	8.294	8.394	10.547	10.019	9.398	7.294
Spectral efficiency (bit/s/Hz)	4.147	4.197	5.274	5.010	4.699	3.647
Average SNR (dB)	15.83	15.64	19.09	18.60	17.65	12.47
LOP at Rx (mW)	0.781	2.55	4.57	5.58	7.73	17.43

IV. OPTIMUM MICRO-LED SIZE FOR LONG-DISTANCE VLC

As the transmission distance increases, the average SNR decreases due to the influence of beam divergence and the attenuation of LOP, resulting in a decrease in communication rate. To investigate the impact of the LOP on the communication performance of 60 μm freestanding GaN micro-LED over long distances, we further extended the transmission distance to 0.5, 1, 5, and 10 m. The extended transmission distance of 10 m is obtained through a high-reflectivity mirror to reflect the light. Here, we maintained the same signal modulation depth and fixed the V_{pp} at 0.7 V. At longer distances, the LOP gradually decreases during transmission. Due to the low detection sensitivity of high-speed PIN photodetectors, excessive attenuation of optical power can lead to a decrease in BER performance. We replace the receiver lens with a Fresnel lens at the transmission distances of 5 and 10 m to obtain optimum performance. As shown in Fig. 5(a) and (b), the data rates and received LOP characteristics of 60 μm GaN-substrate micro-LED under different distances are presented. It can be observed that the data rates of 60 μm GaN-substrate micro-LED at different distances have the same trend as the received LOP, and the LOP linearly decreased between 0.2 m and 1 m. Due to the strong light-gathering ability of the Fresnel lens, the downward trend of LOP at the distance of 5 and 10 m is weakened. At the distance of 0.5, 1,

Authorized licensed use limited to: FUDAN UNIVERSITY. Downloaded on December 05,2024 at 12:43:29 UTC from IEEE Xplore. Restrictions apply.

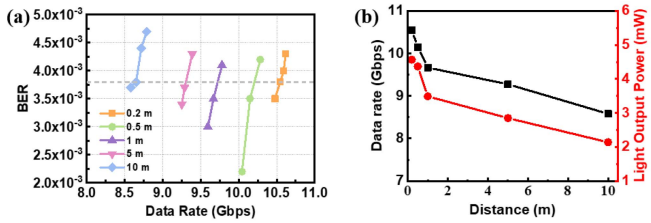

Fig. 5. (a) BER and data rate curves at different distances. (b) Curves of distance versus data rate and LOP.

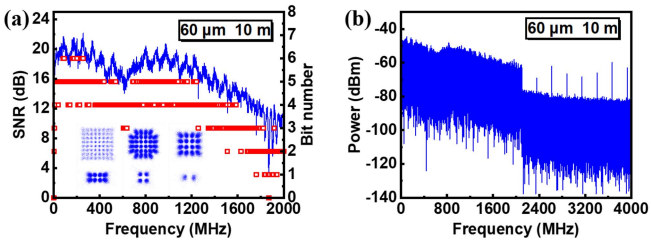

Fig. 6. (a) SNR distribution, bit distribution, and constellation diagram of 60 μm GaN-substrate micro-LED at 10 m. (b) The OFDM signal power spectrum of 60 μm micro-LED at 10 m.

TABLE III
COMMUNICATION PERFORMANCE OF 60 μM GAN-SUBSTRATE MICRO-LED UNDER THE OPTIMAL OPERATING CONDITION

Distance (m)	0.2	0.5	1	5	10
Maximum data rate (Gbps)	10.547	10.045	9.668	9.277	8.649
V_{pp} (V)	0.7	0.7	0.7	0.7	0.7
Average SNR (dB)	19.09	18.6	18.23	17.23	16.33
LOP at Rx (mW)	4.57	4.37	3.49	2.85	2.14

The related section is mainly about the investigation of long-distance VLC, therefore we have bolded the transmission distance values.

5, and 10 m, the corresponding data rates are 10.045, 9.668, 9.277, and 8.649 Gbps, respectively. These are also the record data rates achieved by a single micro-LED over long distances. Fig. 6(a) and (b) illustrate the SNR distribution, bit distribution, constellation plot, and power spectrum of 60 μm GaN-substrate micro-LED at the distance of 10 m. As can be seen from Table III, the average SNR of 60 μm GaN-substrate micro-LED decreases as the transmission distance increases. The data rate gradually decreases due to the lower SNR resulting in a decrease in the number of bits that can be allocated. Limited by the laboratory space, the maximum distance we tested was 10 m, and the received optical power at this time was 2.14 mW, indicating that this distance is not the longest distance that can be reached by the single GaN-substrate micro-LED. These record results reveal the superior performance of GaN-substrate micro-LED in high-speed VLC beyond 10 Gbps.

V. CONCLUSION

In conclusion, blue LEDs on *c*-plane freestanding GaN substrate with sizes of 20, 40, 60, 80, 100 and 300 μm have been fabricated and the size-dependent performance has been investigated. Smaller-size micro-LEDs have higher -3 dB bandwidth, among which, up to $\sim$2.3 GHz bandwidth could be obtained by 20 μm GaN-substrate micro-LED. There exists an optimum size of freestanding GaN LED to balance LOP and modulation bandwidth for a higher transmission data rate. The achieved record data rates of the 20, 40, 60, 80, 100, and 300 μm GaN-substrate LEDs are 8.294, 8.394, 10.547, 10.019, 9.398, and 7.294 Gbps, respectively. We further extend the VLC distance of 60 μm GaN-substrate micro-LED, and data rates of 10.045, 9.668, 9.277, and 8.649 Gbps at different distances of 0.5, 1, 5, and 10 m are achieved. These high data rates achieved by a single GaN-substrate micro-LED are expected to drive the rapid development of VLC in 6G communication.

REFERENCES

[1] M. Z. Chowdhury, M. Shahjalal, M. K. Hasan, and Y. M. Jang, "The role of optical wireless communication technologies in 5G/6G and IoT solutions: Prospects, directions, and challenges," *Appl. Sci.*, vol. 9, no. 20, 2019, Art. no. 4367.
[2] S. Zhu et al., "High-speed long-distance visible light communication based on multicolor series connection micro-LEDs and wavelength division multiplexing," *Photon. Res.*, vol. 10, no. 8, pp. 1892–1899, 2022.
[3] E. Xie et al., "Over 10 Gbps VLC for long-distance applications using a GaN-based series-biased micro-LED array," *IEEE Photon. Technol. Lett.*, vol. 32, no. 9, pp. 499–502, May 2020.
[4] Z. Jin, L. Yan, S. Zhu, X. Cui, and P. Tian, "10-Gbps visible light communication in a 10-m free space based on violet series-biased micro-LED array and distance adaptive pre-equalization," *Opt. Lett.*, vol. 48, no. 8, pp. 2026–2029, 2023.
[5] M. S. Islim et al., "Towards 10 GB/s orthogonal frequency division multiplexing-based visible light communication using a GaN violet micro-LED," *Photon. Res.*, vol. 5, no. 2, pp. A35–A43, 2017.
[6] Z. Wei et al., "8.75 Gbps visible light communication link using an artificial neural network equalizer and a single-pixel blue micro-LED," *Opt. Lett.*, vol. 46, no. 18, pp. 4670–4673, 2021.
[7] X. Shan et al., "Comparison of beyond 1 GHz *c*-plane freestanding and sapphire-substrate GaN-based micro-LEDs for high-speed visible light communication," *J. Lightw. Technol.*, vol. 41, no. 5, pp. 1480–1486, Mar. 2023.
[8] R. Lin et al., "High bandwidth series-biased green micro-LED array toward 6 Gbps visible light communication," *Opt. Lett.*, vol. 47, no. 13, pp. 3343–3346, 2022.
[9] D. M. Maclure et al., "Hundred-meter Gb/s deep ultraviolet wireless communications using AlGaN micro-LEDs," *Opt. Exp.*, vol. 30, no. 26, pp. 46811–46821, 2022.
[10] D. Sun et al., "6 Gbps micro-LED transmission using OFDM with predistortion and single-tap nonlinearity compensation," *IEEE Photon. Technol. Lett.*, vol. 35, no. 14, pp. 781–784, Jul. 2023.
[11] G. Zhou et al., "GaN-based micro-LEDs and detectors defined by current spreading layer: Size-dependent characteristics and their multifunctional applications," *J. Phys. D: Appl. Phys.*, vol. 54, no. 33, 2021, Art. no. 335104.
[12] Z. Qian et al., "Analysis of the efficiency improvement of 273 nm AlGaN UV-C micro-LEDs," *J. Phys. D: Appl. Phys.*, vol. 55, no. 19, 2022, Art. no. 195104.
[13] Z. Qian et al., "Size-dependent UV-C communication performance of AlGaN micro-LEDs and LEDs," *J. Lightw. Technol.*, vol. 40, no. 22, pp. 7289–7296, Nov. 2022.
[14] H. Lan, I. Tseng, H. Kao, Y. Lin, G. Lin, and C. Wu, "752-MHz modulation bandwidth of high-speed blue micro light-emitting diodes," *IEEE J. Quantum Electron.*, vol. 54, no. 5, Oct. 2018, Art. no. 3300106.
[15] B. Chen, C. Chang, Y. Fu, K. Huang, Y. Lu, and Y. Su, "Improved performance of InGaN/GaN light-emitting diodes with thin intermediate barriers," *IEEE Photon. Technol. Lett.*, vol. 23, no. 22, pp. 1682–1684, Nov. 2011.
[16] X. Shan et al., "Multifunctional ultraviolet-C micro-LED with monolithically integrated photodetector for optical wireless communication," *J. Lightw. Technol.*, vol. 40, no. 2, pp. 490–498, Jan. 2022.
[17] P. Tian et al., "Size-dependent efficiency and efficiency droop of blue InGaN micro-light emitting diodes," *Appl. Phys. Lett.*, vol. 101, no. 23, 2012, Art. no. 231110.
[18] P. Qiu et al., "4.0 Gbps visible light communication in a foggy environment based on a blue laser diode," *Opt. Exp.*, vol. 29, no. 9, pp. 14163–14173, 2021.
[19] F. Hu et al., "High-speed visible light communication systems based on Si-substrate LEDs with multiple superlattice interlayers," *PhotoniX*, vol. 2, no. 1, pp. 1–18, 2021.

Authorized licensed use limited to: FUDAN UNIVERSITY. Downloaded on December 05,2024 at 12:43:29 UTC from IEEE Xplore. Restrictions apply.