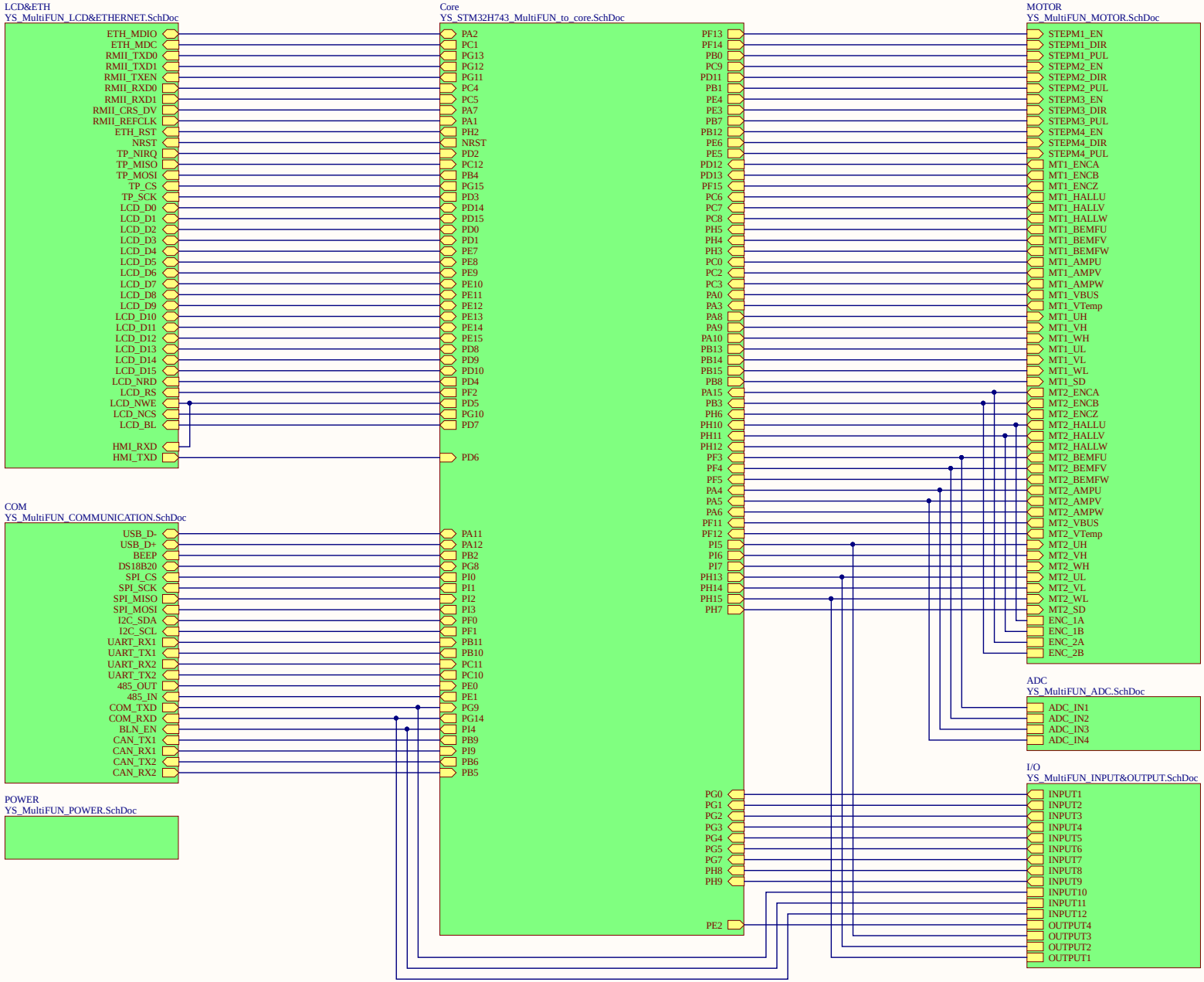

Title: **MultiFun EXPBoard**		
Author: 广州大硬石科技		Revision: **V1.1**
Date: 2020/5/13	Time: 19:09:50	Sheet 1 of 8
File: YS_STM32H743_MultiFUN_EXPBoard.SchDoc		Size: A3

硬石科技
www.ing10bbs.com

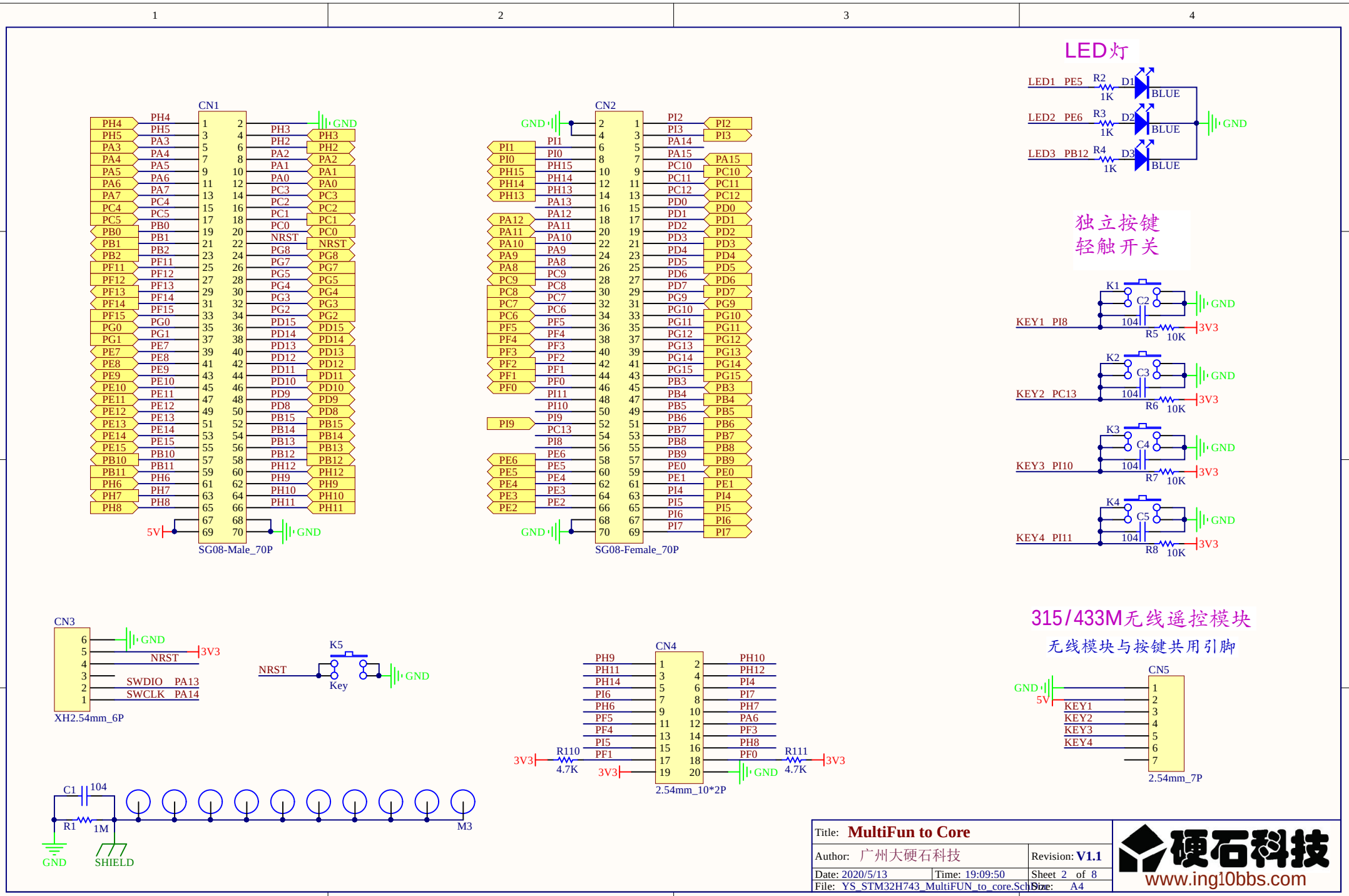
LED灯
LED1 PE5 R2 1K D1 BLUE
LED2 PE6 R3 1K D2 BLUE
LED3 PB12 R4 1K D3 BLUE
GND
独立按键
轻触开关
K1 C2 104 R5 10K
KEY1 PI8
K2 C3 104 R6 10K
KEY2 PC13
K3 C4 104 R7 10K
KEY3 PI10
K4 C5 104 R8 10K
KEY4 PI11
3V3
CN1
SG08-Male_70P
CN2
SG08-Female_70P
CN3
XH2.54mm_6P
NRST
SWDIO PA13
SWCLK PA14
K5
Key
CN4
2.54mm_10*2P
R110 4.7K
R111 4.7K
315/433M无线遥控模块
无线模块与按键共用引脚
CN5
2.54mm_7P
C1 104
R1 1M
M3
SHIELD
Title: MultiFun to Core
Author: 广州大硬石科技
Revision: V1.1
Date: 2020/5/13
Time: 19:09:50
Sheet 2 of 8
File: YS_STM32H743_MultiFUN_to_core.SchDoc
Size: A4
硬石科技
www.ing10bbs.com

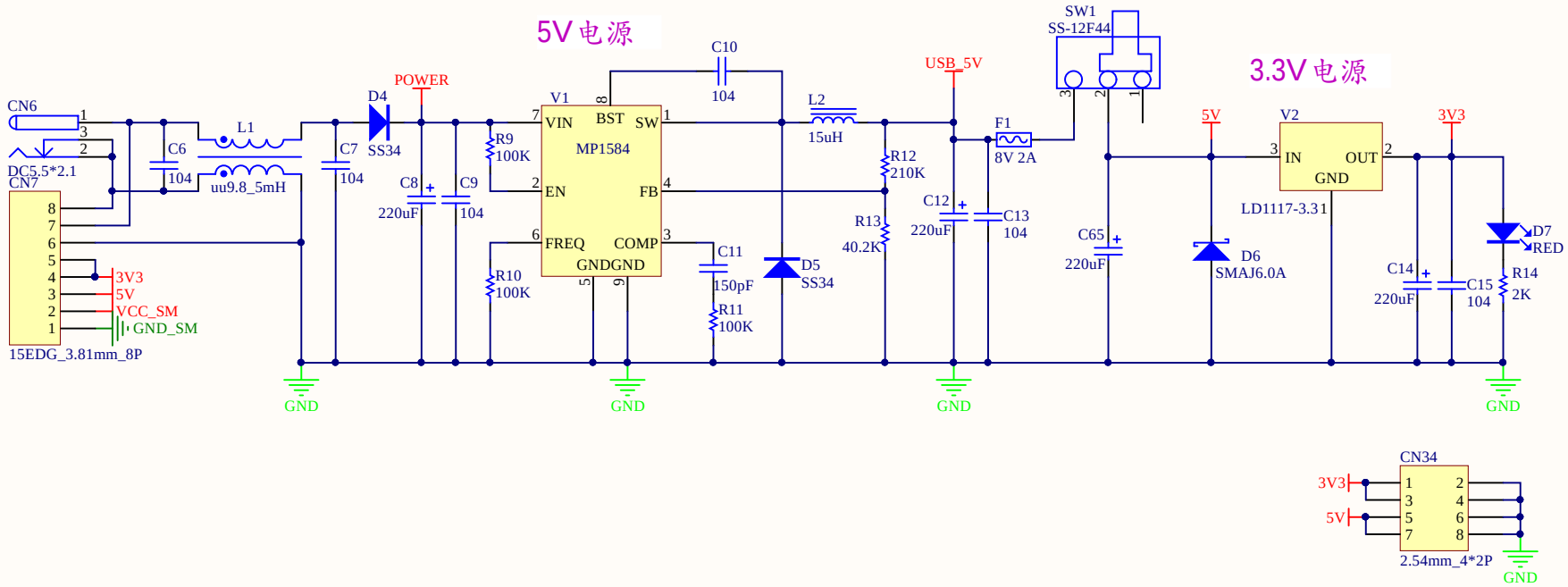

Title: **Power**		
Author: 广州大硬石科技		Revision: **V1.1**
Date: 2020/5/13	Time: 19:09:50	Sheet 3 of 8
File: YS_MultiFUN_POWER.SchDoc		Size: A4

硬石科技
www.ing10bbs.com

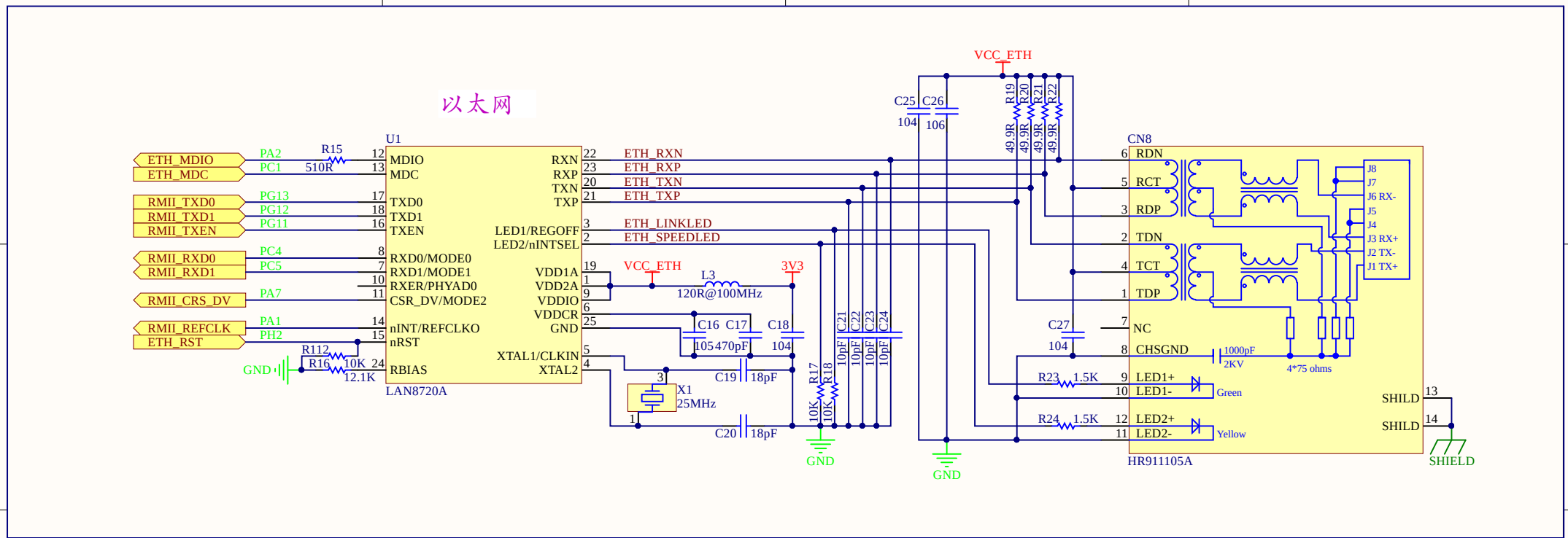

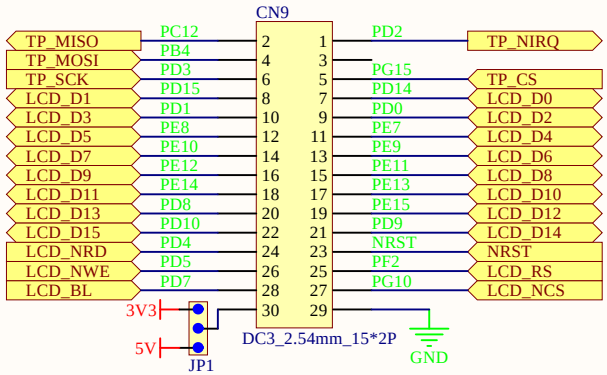

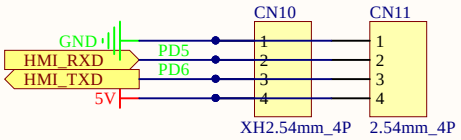

Title: **LCD & Ethernet**		
Author: 广州大硬石科技		Revision: **V1.1**
Date: 2020/5/13	Time: 19:09:50	Sheet 4 of 8
File: YS_MultiFUN_LCD&ETHERNET.SchDoc		Size: A4

硬石科技
www.ing10bbs.com

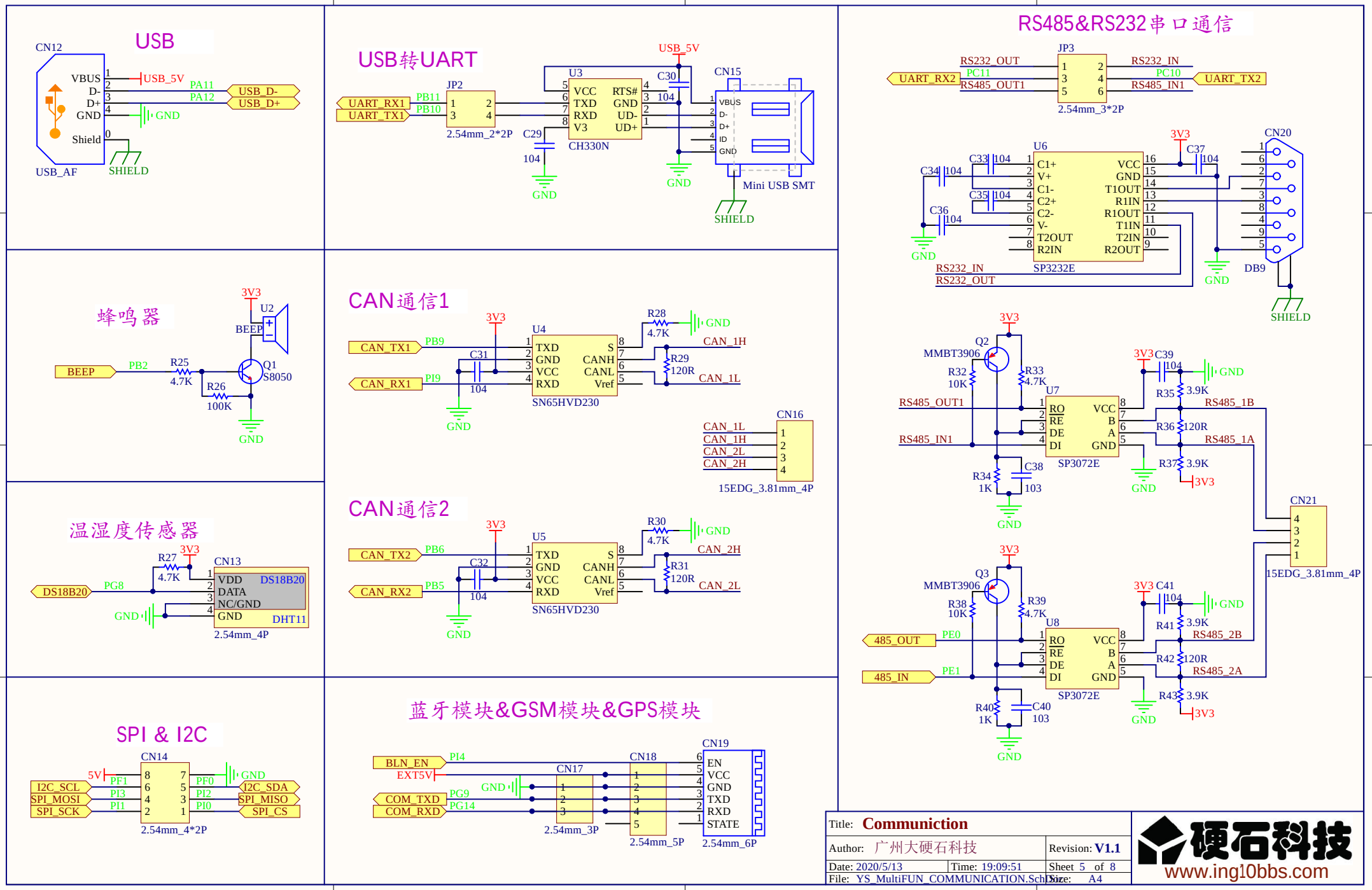
USB
CN12
VBUS
D-
D+
GND
Shield
USB_5V
PA11
PA12
USB_D-
USB_D+
GND
SHIELD
USB_AF
USB转UART
JP2
UART_RX1
UART_TX1
PB11
PB10
2.54mm_2*2P
U3
VCC
TXD
RXD
V3
RTS#
GND
UD-
UD+
CH330N
C29
104
C30
104
USB_5V
CN15
VBUS
D-
D+
ID
GND
Mini USB SMT
SHIELD
RS485&RS232串口通信
JP3
RS232_OUT
PC11
RS485_OUT1
UART_RX2
RS232_IN
PC10
RS485_IN1
UART_TX2
2.54mm_3*2P
U6
C1+
V+
C1-
C2+
C2-
V-
T2OUT
R2IN
VCC
GND
T1OUT
R1IN
R1OUT
T1IN
T2IN
R2OUT
SP3232E
C33 104
C34 104
C35 104
C36 104
C37 104
3V3
CN20
DB9
SHIELD
RS232_IN
RS232_OUT
蜂鸣器
3V3
U2
BEEP
BEEP
PB2
R25
4.7K
R26
100K
Q1
S8050
GND
CAN通信1
CAN_TX1
PB9
CAN_RX1
PI9
3V3
C31
104
U4
TXD
GND
VCC
RXD
S
CANH
CANL
Vref
SN65HVD230
R28
4.7K
R29
120R
CAN_1H
CAN_1L
CN16
CAN_1L
CAN_1H
CAN_2L
CAN_2H
15EDG_3.81mm_4P
CAN通信2
CAN_TX2
PB6
CAN_RX2
PB5
3V3
C32
104
U5
TXD
GND
VCC
RXD
S
CANH
CANL
Vref
SN65HVD230
R30
4.7K
R31
120R
CAN_2H
CAN_2L
温湿度传感器
DS18B20
PG8
R27
4.7K
3V3
CN13
VDD
DATA
NC/GND
GND
DS18B20
DHT11
2.54mm_4P
SPI & I2C
CN14
5V
PF1
PI3
PI1
PF0
PI2
PI0
I2C_SCL
SPI_MOSI
SPI_SCK
I2C_SDA
SPI_MISO
SPI_CS
2.54mm_4*2P
蓝牙模块&GSM模块&GPS模块
BLN_EN
PI4
EXT5V
COM_TXD
PG9
COM_RXD
PG14
CN17
CN18
CN19
EN
VCC
GND
TXD
RXD
STATE
2.54mm_3P
2.54mm_5P
2.54mm_6P
Q2
MMBT3906
R32
10K
R33
4.7K
U7
RO
RE
DE
DI
VCC
B
A
GND
SP3072E
RS485_OUT1
RS485_IN1
R34
1K
C38
103
C39
104
R35
3.9K
R36
120R
R37
3.9K
RS485_1B
RS485_1A
Q3
MMBT3906
R38
10K
R39
4.7K
U8
485_OUT
PE0
485_IN
PE1
R40
1K
C40
103
C41
104
R41
3.9K
R42
120R
R43
3.9K
RS485_2B
RS485_2A
CN21
15EDG_3.81mm_4P
Title: Communiction
Author: 广州大硬石科技
Revision: V1.1
Date: 2020/5/13
Time: 19:09:51
Sheet 5 of 8
File: YS_MultiFUN_COMMUNICATION.SchDoc
Size: A4
硬石科技
www.ing10bbs.com

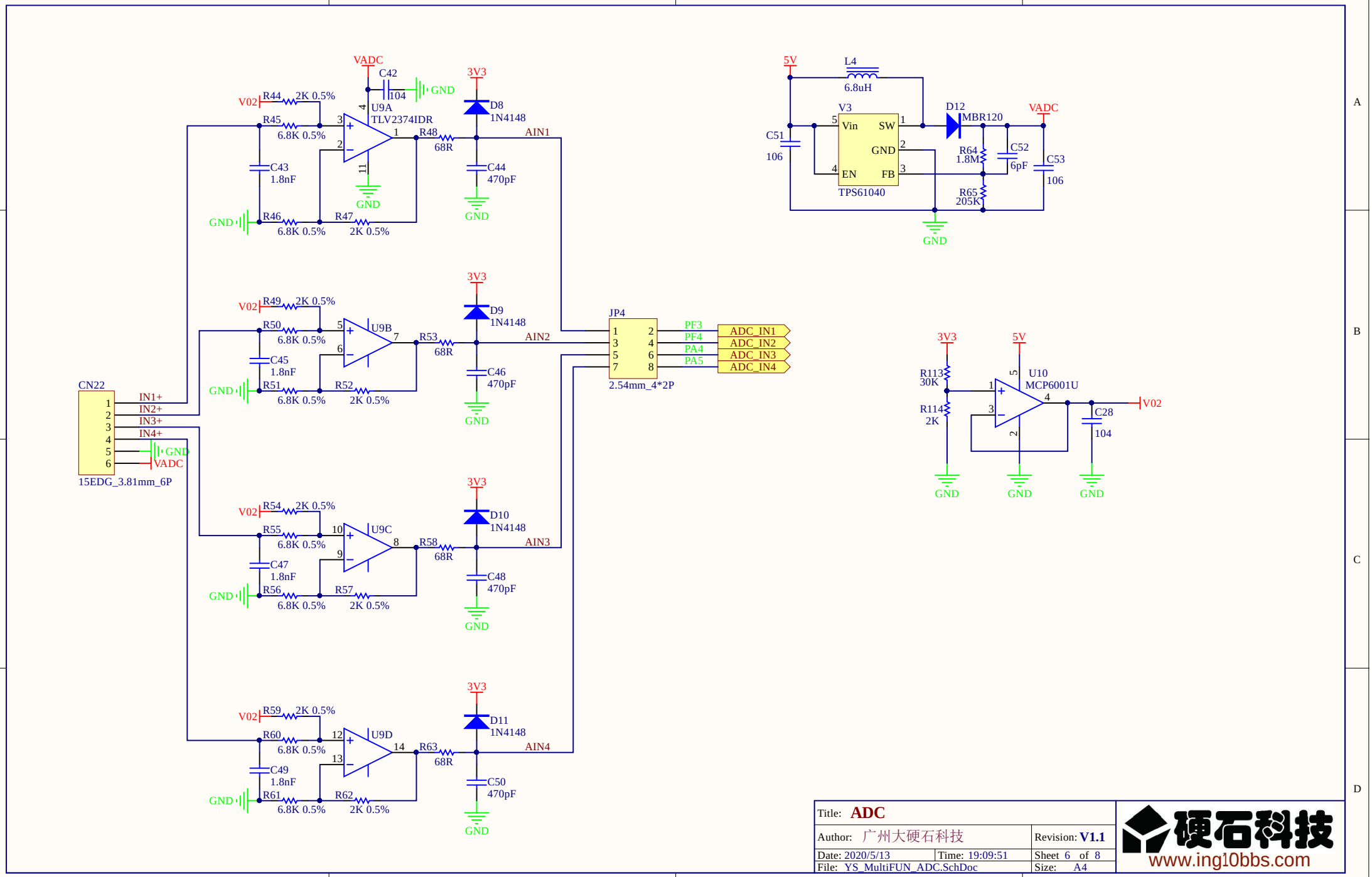

Title: **ADC**		
Author: 广州大硬石科技		Revision: **V1.1**
Date: 2020/5/13	Time: 19:09:51	Sheet 6 of 8
File: YS_MultiFUN_ADC.SchDoc		Size: A4

硬石科技
www.ing10bbs.com

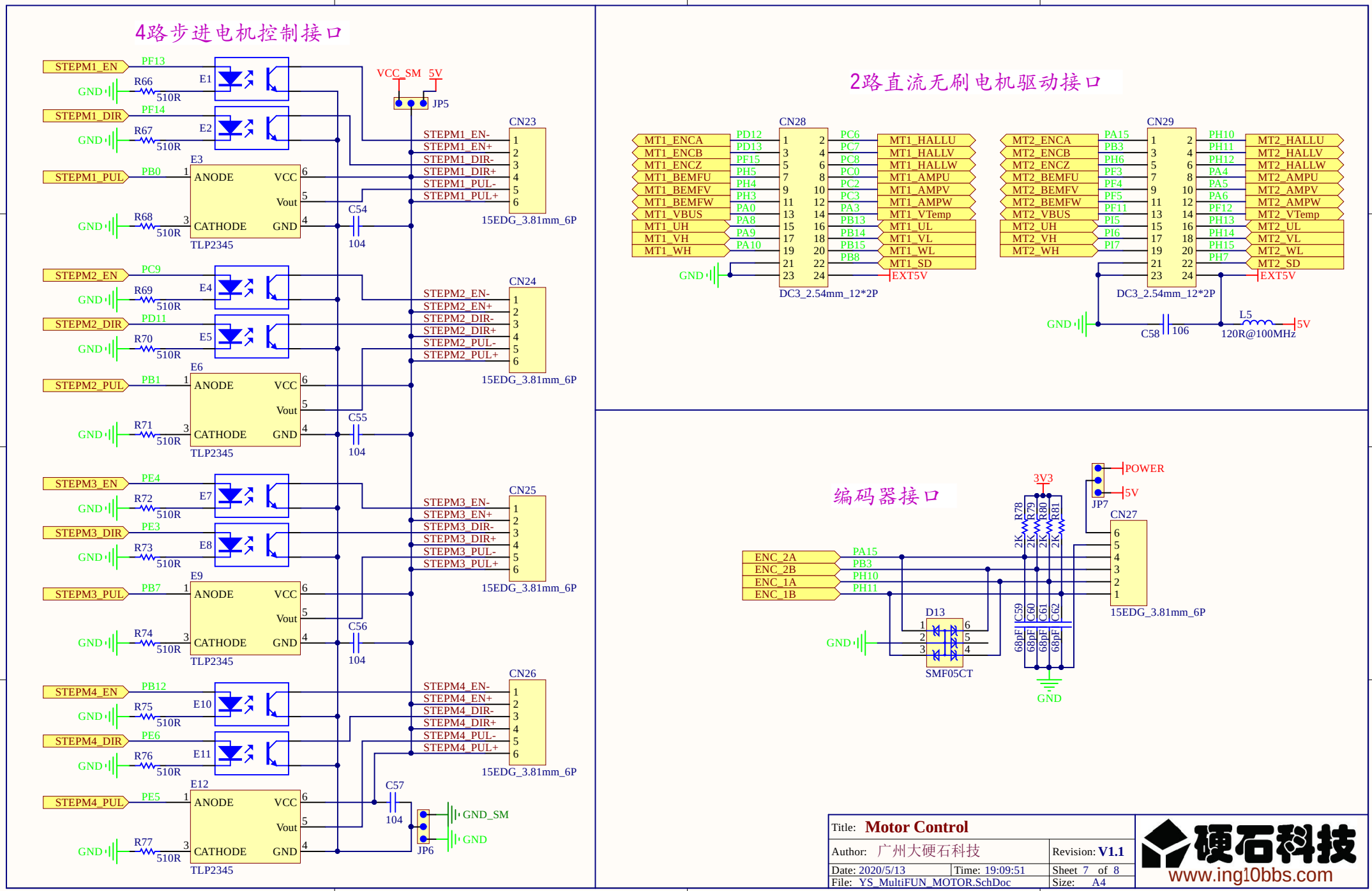
4路步进电机控制接口
STEPM1_EN
STEPM1_DIR
STEPM1_PUL
STEPM2_EN
STEPM2_DIR
STEPM2_PUL
STEPM3_EN
STEPM3_DIR
STEPM3_PUL
STEPM4_EN
STEPM4_DIR
STEPM4_PUL
PF13
PF14
PB0
PC9
PD11
PB1
PE4
PE3
PB7
PB12
PE6
PE5
R66
R67
R68
R69
R70
R71
R72
R73
R74
R75
R76
R77
510R
GND
E1
E2
E3
E4
E5
E6
E7
E8
E9
E10
E11
E12
ANODE
VCC
Vout
CATHODE
GND
TLP2345
VCC_SM
5V
JP5
C54
C55
C56
C57
104
CN23
CN24
CN25
CN26
STEPM1_EN-
STEPM1_EN+
STEPM1_DIR-
STEPM1_DIR+
STEPM1_PUL-
STEPM1_PUL+
STEPM2_EN-
STEPM2_EN+
STEPM2_DIR-
STEPM2_DIR+
STEPM2_PUL-
STEPM2_PUL+
STEPM3_EN-
STEPM3_EN+
STEPM3_DIR-
STEPM3_DIR+
STEPM3_PUL-
STEPM3_PUL+
STEPM4_EN-
STEPM4_EN+
STEPM4_DIR-
STEPM4_DIR+
STEPM4_PUL-
STEPM4_PUL+
15EDG_3.81mm_6P
GND_SM
JP6
2路直流无刷电机驱动接口
CN28
MT1_ENCA
MT1_ENCB
MT1_ENCZ
MT1_BEMFU
MT1_BEMFV
MT1_BEMFW
MT1_VBUS
MT1_UH
MT1_VH
MT1_WH
PD12
PD13
PF15
PH5
PH4
PH3
PA0
PA8
PA9
PA10
PC6
PC7
PC8
PC0
PC2
PC3
PA3
PB13
PB14
PB15
PB8
MT1_HALLU
MT1_HALLV
MT1_HALLW
MT1_AMPU
MT1_AMPV
MT1_AMPW
MT1_VTemp
MT1_UL
MT1_VL
MT1_WL
MT1_SD
EXT5V
DC3_2.54mm_12*2P
CN29
MT2_ENCA
MT2_ENCB
MT2_ENCZ
MT2_BEMFU
MT2_BEMFV
MT2_BEMFW
MT2_VBUS
MT2_UH
MT2_VH
MT2_WH
PA15
PB3
PH6
PF3
PF4
PF5
PF11
PI5
PI6
PI7
PH10
PH11
PH12
PA4
PA5
PA6
PF12
PH13
PH14
PH15
PH7
MT2_HALLU
MT2_HALLV
MT2_HALLW
MT2_AMPU
MT2_AMPV
MT2_AMPW
MT2_VTemp
MT2_UL
MT2_VL
MT2_WL
MT2_SD
C58
106
L5
120R@100MHz
5V
编码器接口
ENC_2A
ENC_2B
ENC_1A
ENC_1B
PA15
PB3
PH10
PH11
D13
SMF05CT
3V3
R78
R79
R80
R81
2K
C59
C60
C61
C62
68pF
POWER
JP7
CN27
Title: Motor Control
Author: 广州大硬石科技
Revision: V1.1
Date: 2020/5/13
Time: 19:09:51
Sheet 7 of 8
File: YS_MultiFUN_MOTOR.SchDoc
Size: A4
硬石科技
www.ing10bbs.com

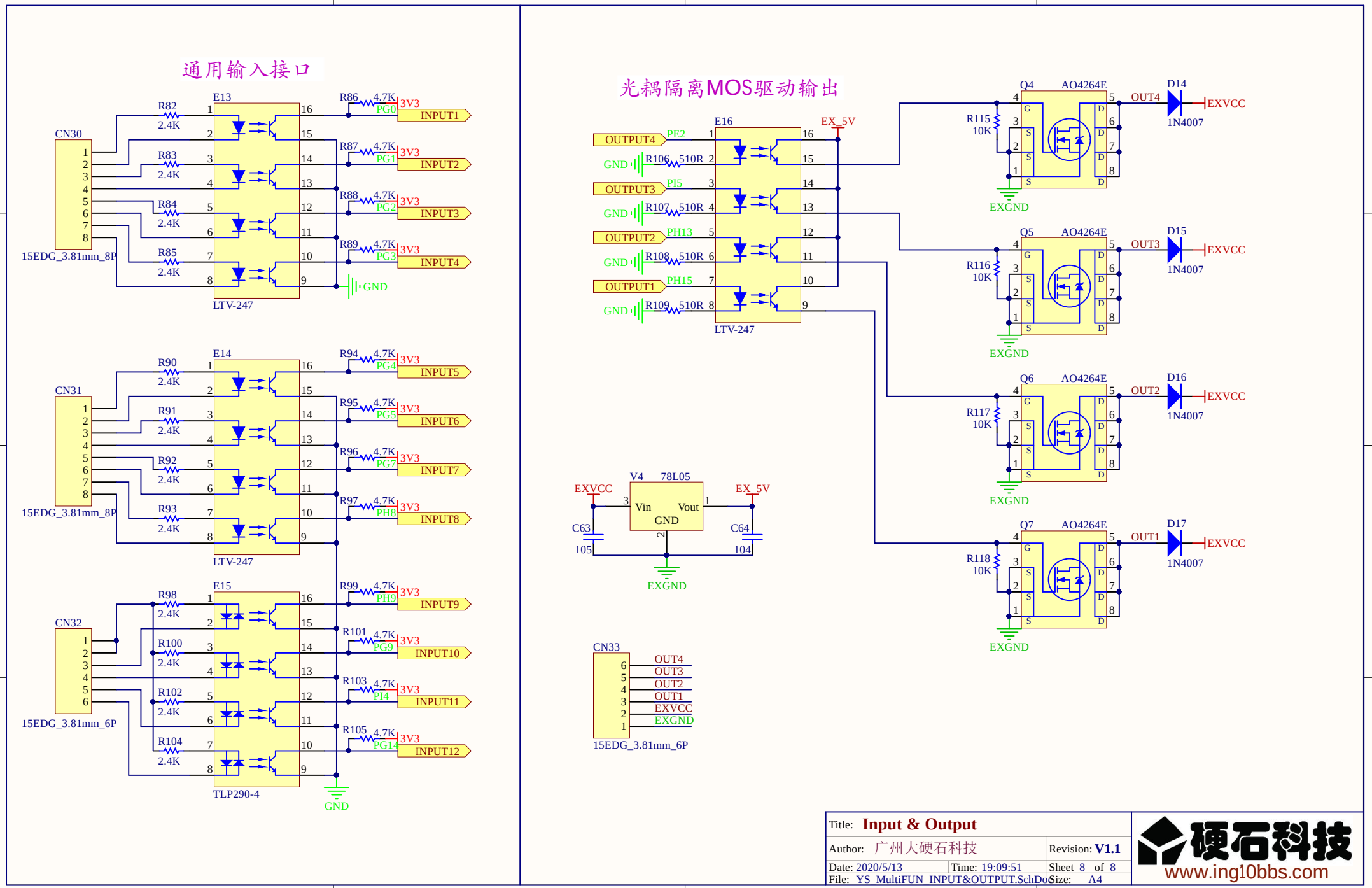
通用输入接口
光耦隔离MOS驱动输出
CN30
15EDG_3.81mm_8P
E13
LTV-247
R82 2.4K
R83 2.4K
R84 2.4K
R85 2.4K
R86 4.7K PG0 3V3 INPUT1
R87 4.7K PG1 3V3 INPUT2
R88 4.7K PG2 3V3 INPUT3
R89 4.7K PG3 3V3 INPUT4
GND
CN31
15EDG_3.81mm_8P
E14
LTV-247
R90 2.4K
R91 2.4K
R92 2.4K
R93 2.4K
R94 4.7K PG4 3V3 INPUT5
R95 4.7K PG5 3V3 INPUT6
R96 4.7K PG7 3V3 INPUT7
R97 4.7K PH8 3V3 INPUT8
CN32
15EDG_3.81mm_6P
E15
TLP290-4
R98 2.4K
R100 2.4K
R102 2.4K
R104 2.4K
R99 4.7K PH9 3V3 INPUT9
R101 4.7K PG9 3V3 INPUT10
R103 4.7K PI4 3V3 INPUT11
R105 4.7K PG14 3V3 INPUT12
GND
E16
LTV-247
EX_5V
OUTPUT4 PE2
OUTPUT3 PI5
OUTPUT2 PH13
OUTPUT1 PH15
R106 510R
R107 510R
R108 510R
R109 510R
GND
V4 78L05
Vin Vout GND
EXVCC
EX_5V
C63 105
C64 104
EXGND
CN33
15EDG_3.81mm_6P
OUT4
OUT3
OUT2
OUT1
EXVCC
EXGND
Q4 AO4264E
Q5 AO4264E
Q6 AO4264E
Q7 AO4264E
R115 10K
R116 10K
R117 10K
R118 10K
D14 1N4007 OUT4
D15 1N4007 OUT3
D16 1N4007 OUT2
D17 1N4007 OUT1
EXVCC
EXGND
Title: Input & Output
Author: 广州大硬石科技
Revision: V1.1
Date: 2020/5/13
Time: 19:09:51
Sheet 8 of 8
File: YS_MultiFUN_INPUT&OUTPUT.SchDoc
Size: A4
硬石科技
www.ing10bbs.com

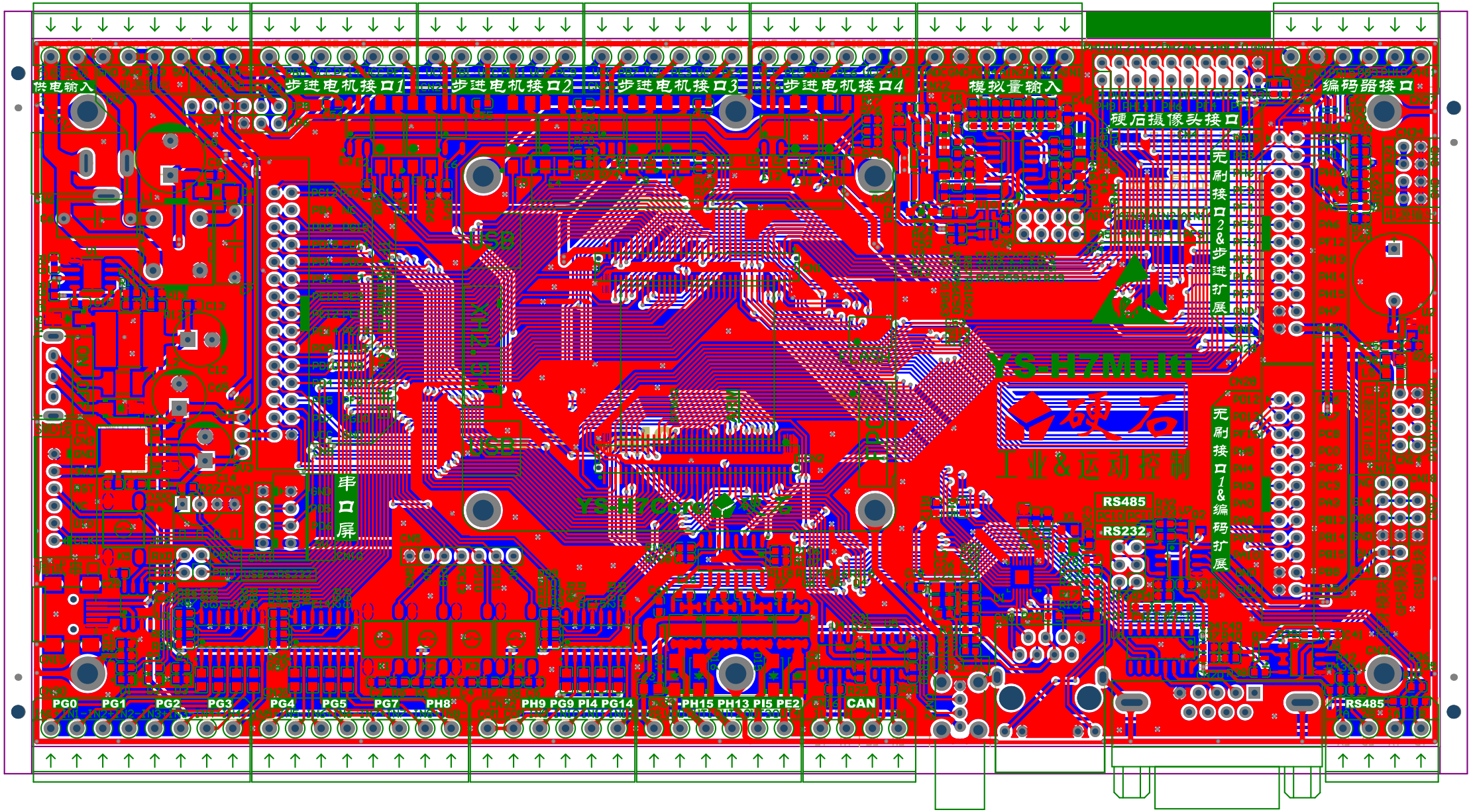
供电输入
步进电机接口1
步进电机接口2
步进电机接口3
步进电机接口4
模拟量输入
硬石摄像头接口
编码器接口
无刷接口2&步进扩展
无刷接口1&编码扩展
YS-H7Multi
硬石
工业&运动控制
串口屏
RS485
RS232
PG0 PG1 PG2 PG3 PG4 PG5 PG7 PH8
PH9 PG9 PI4 PG14
PH15 PH13 PI5 PE2
CAN
RS485