# MCU

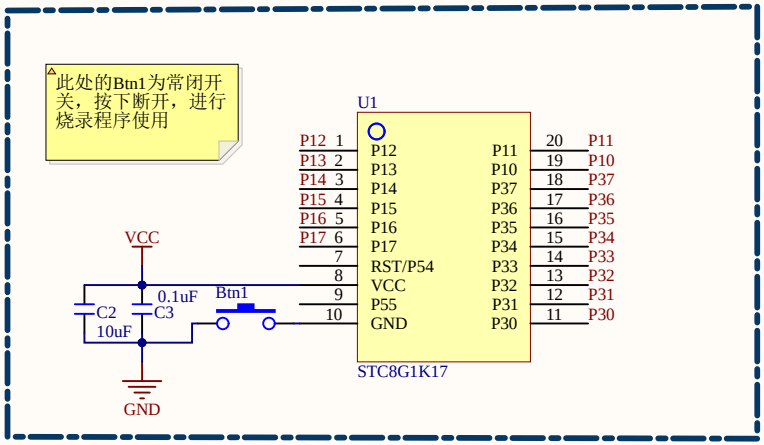


# CH340

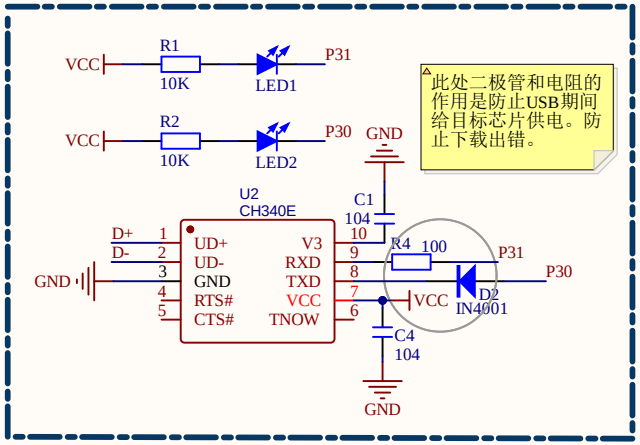


# Expand

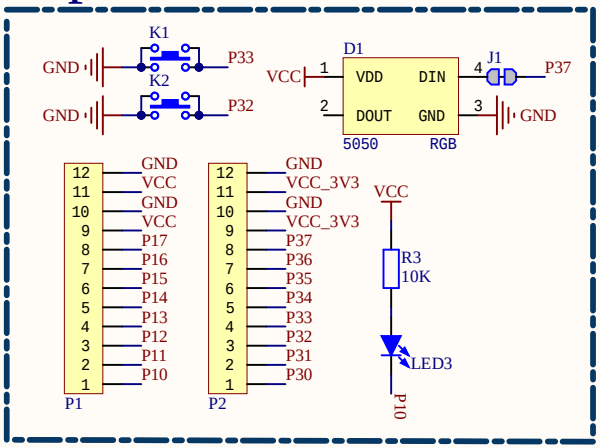


# OLED

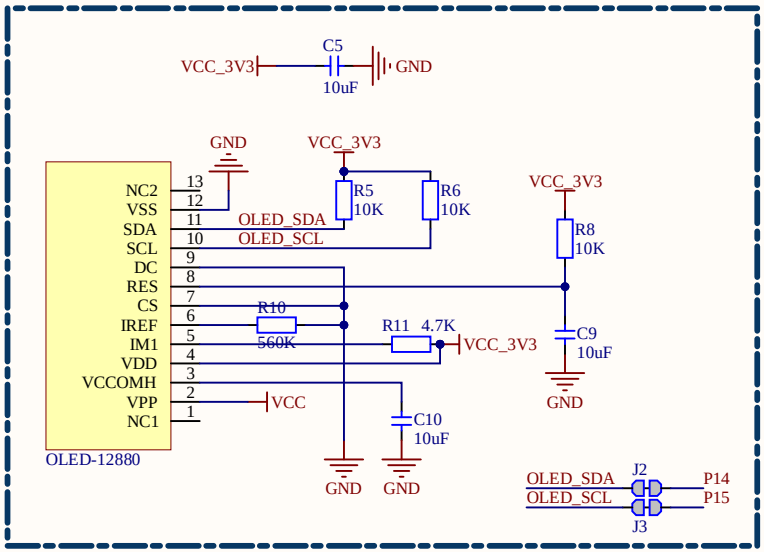


# Power

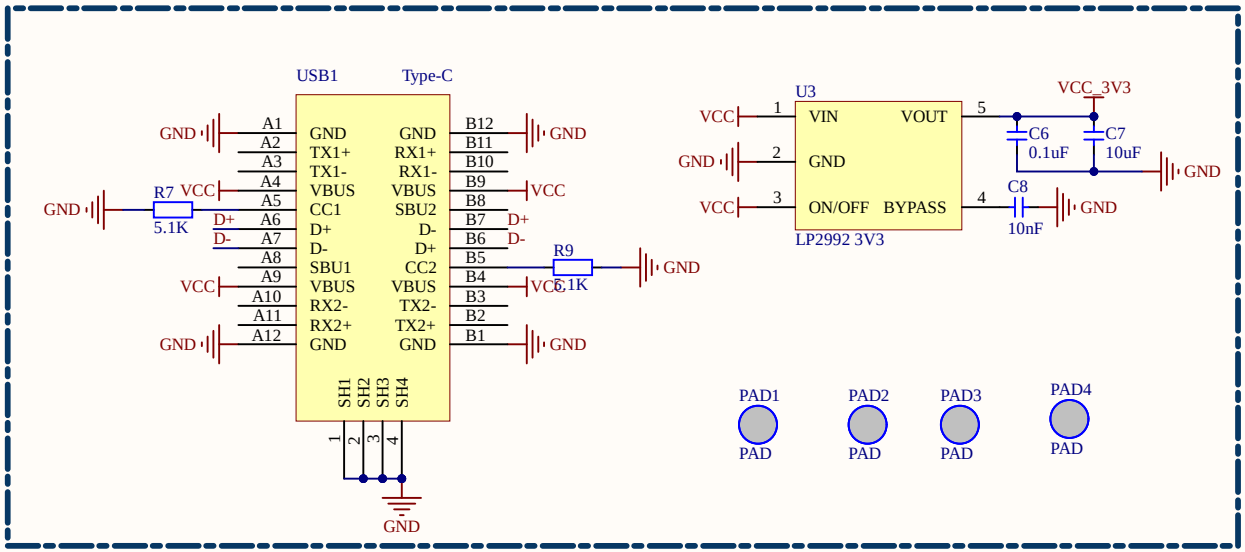


| | | | |
|---|---|---|---|
| Title | *STC8G-Nano* | | 说明：<br>集成CH340<br>集成OLED<br>采用增强型51<br>自带幻彩5050 |
| Author: 周琦 | Number: * | Revision: A0 | |
| Date: 2022/5/25 | Time: 11:01:20 | Sheet 1 of 1 | |
| File: D:\桌面\毕设项目\07-STC8G_Nano\1.Hardware\Main.SchDoc | | | |