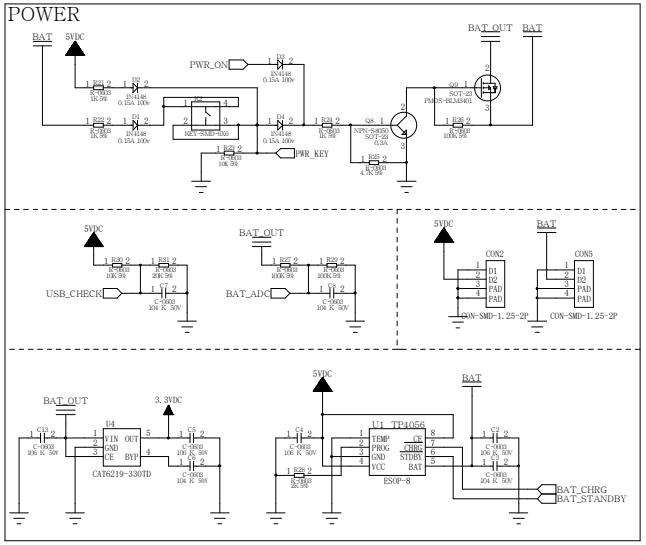

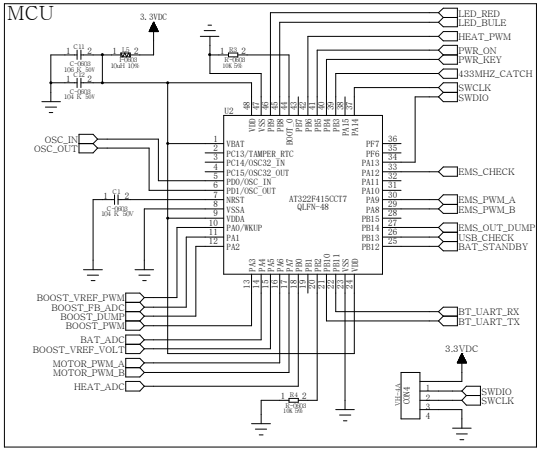

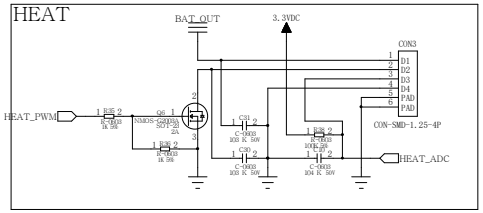

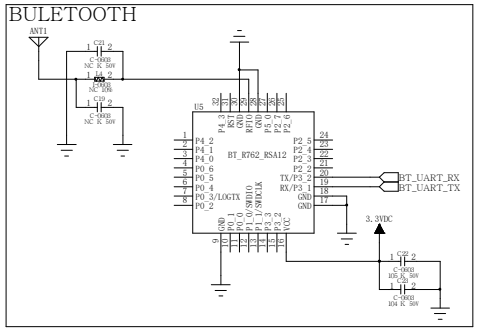

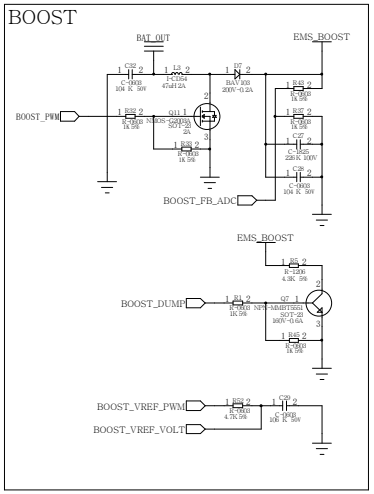

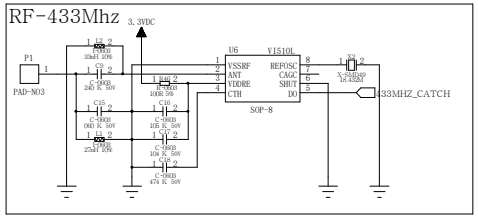

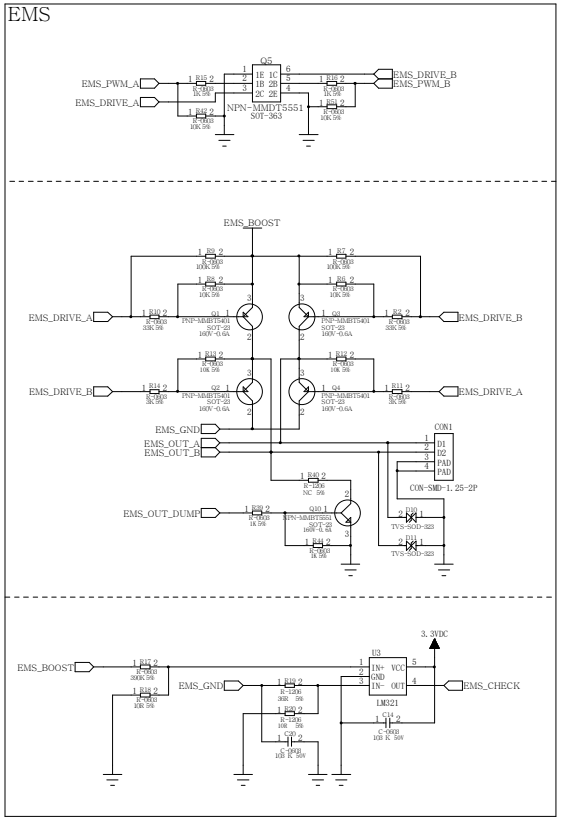

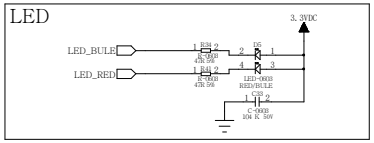

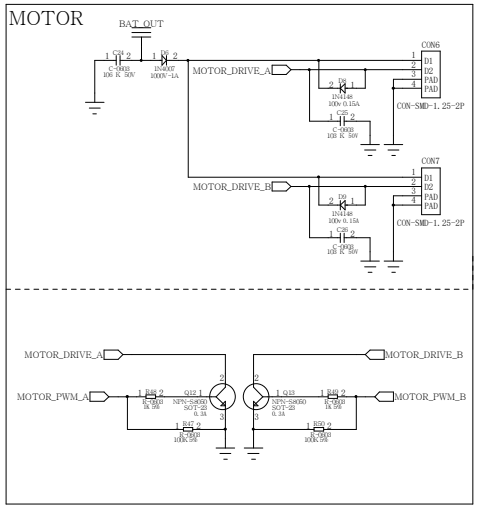

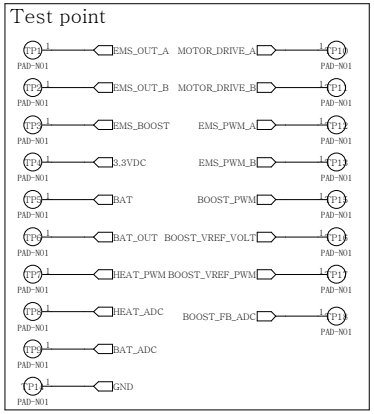

DRAWN: CQ.KIM	DATED: 2020.01.09	TITLE K51			
CHECKED: CQ.KIM	DATED: 2020.01.09	CODE ---	SIZE C	DRAWING NO ----	REV 1
RELEASED: CQ.KIM	DATED: 2020.01.09	SCALE:		SHEET 1	