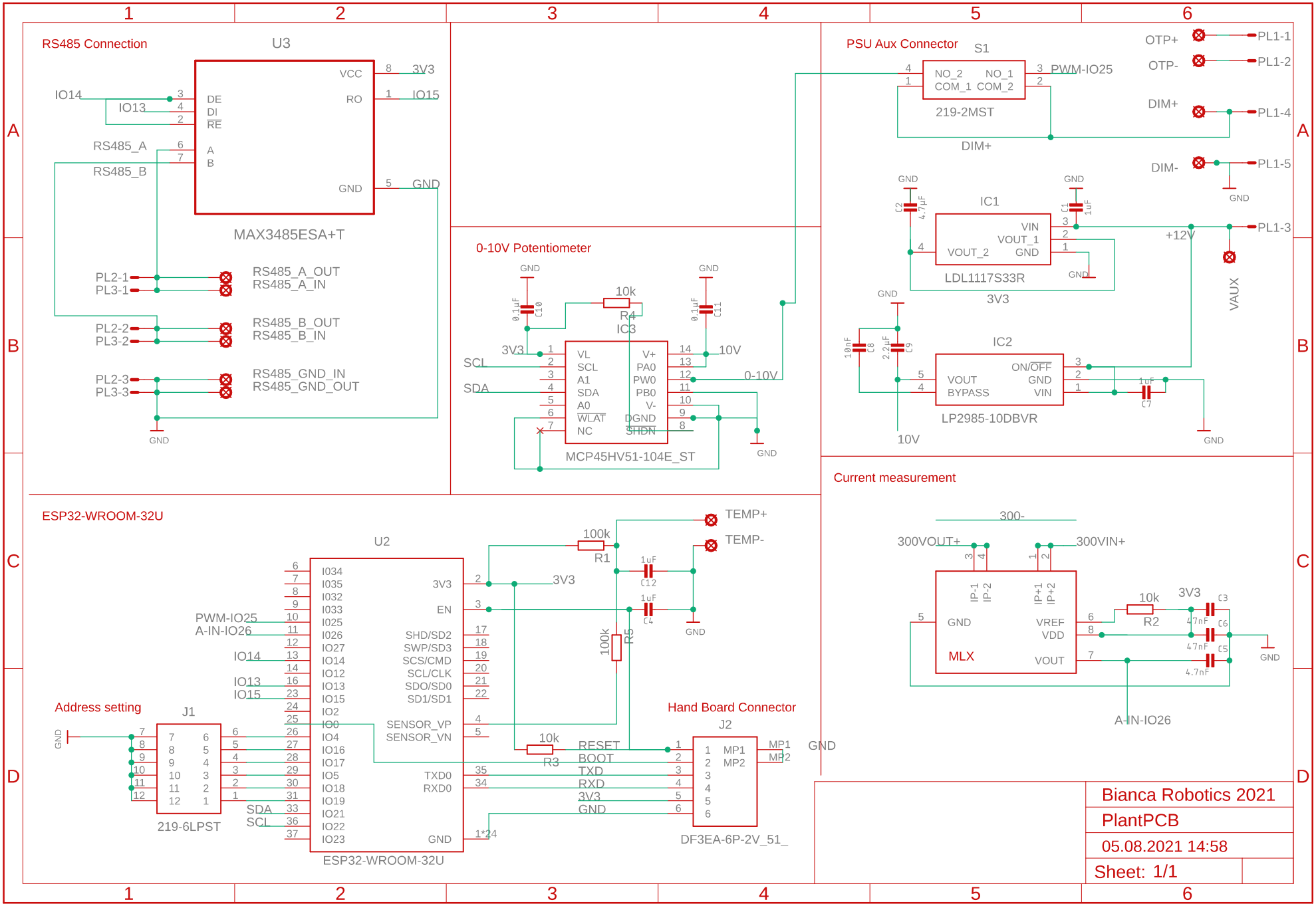
RS485 Connection
U3
VCC
RO
DE
DI
RE
A
B
GND
3V3
IO15
IO14
IO13
RS485_A
RS485_B
MAX3485ESA+T
PL2-1
PL3-1
RS485_A_OUT
RS485_A_IN
PL2-2
PL3-2
RS485_B_OUT
RS485_B_IN
PL2-3
PL3-3
RS485_GND_IN
RS485_GND_OUT
0-10V Potentiometer
10k
R4
IC3
VL
SCL
A1
SDA
A0
WLAT
NC
V+
PA0
PW0
PB0
V-
DGND
SHDN
MCP45HV51-104E_ST
10V
0-10V
PSU Aux Connector
S1
NO_2
NO_1
COM_1
COM_2
219-2MST
PWM-IO25
OTP+
OTP-
DIM+
DIM-
PL1-1
PL1-2
PL1-4
PL1-5
PL1-3
IC1
VIN
VOUT_1
VOUT_2
LDL1117S33R
3V3
+12V
VAUX
IC2
VOUT
BYPASS
ON/OFF
LP2985-10DBVR
ESP32-WROOM-32U
U2
3V3
EN
SHD/SD2
SWP/SD3
SCS/CMD
SCL/CLK
SDO/SD0
SD1/SD1
SENSOR_VP
SENSOR_VN
TXD0
RXD0
PWM-IO25
A-IN-IO26
IO14
IO13
IO15
SDA
SCL
TEMP+
TEMP-
100k
R1
R5
R3
RESET
BOOT
TXD
RXD
Address setting
J1
219-6LPST
Hand Board Connector
J2
MP1
MP2
DF3EA-6P-2V_51_
Current measurement
300-
300VOUT+
300VIN+
IP-1
IP-2
IP+1
IP+2
MLX
VREF
VDD
VOUT
R2
A-IN-IO26
Bianca Robotics 2021
PlantPCB
05.08.2021 14:58
Sheet: 1/1