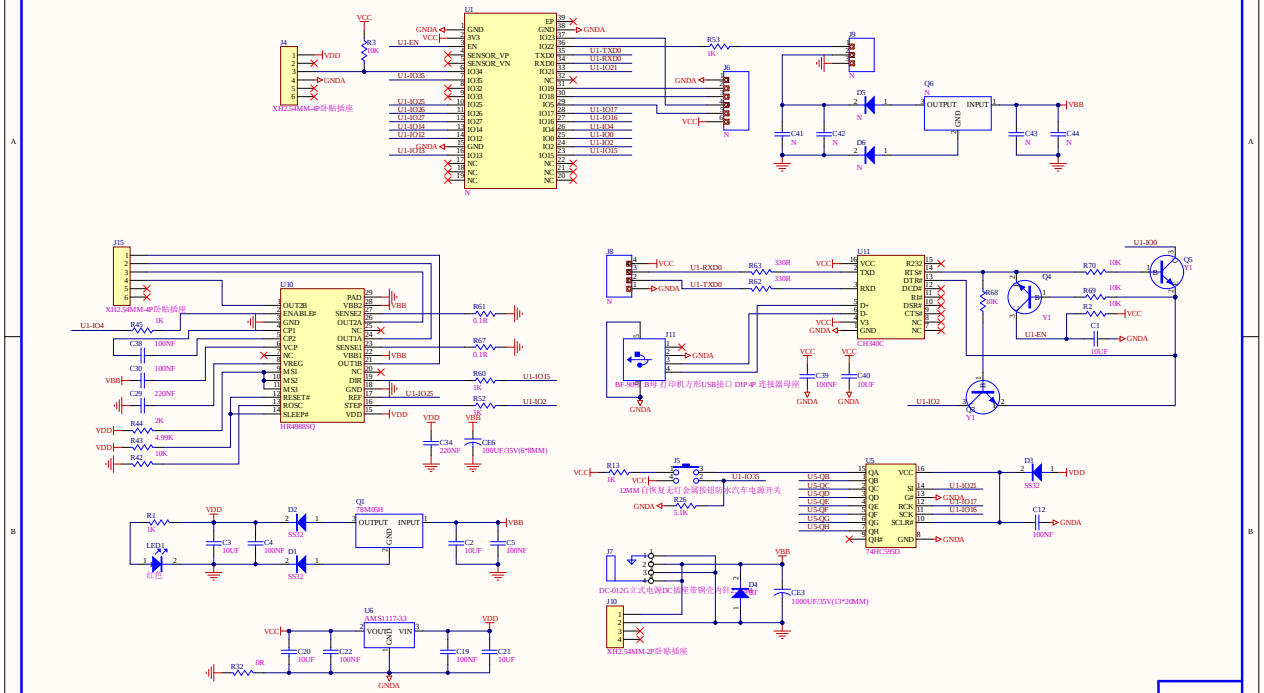

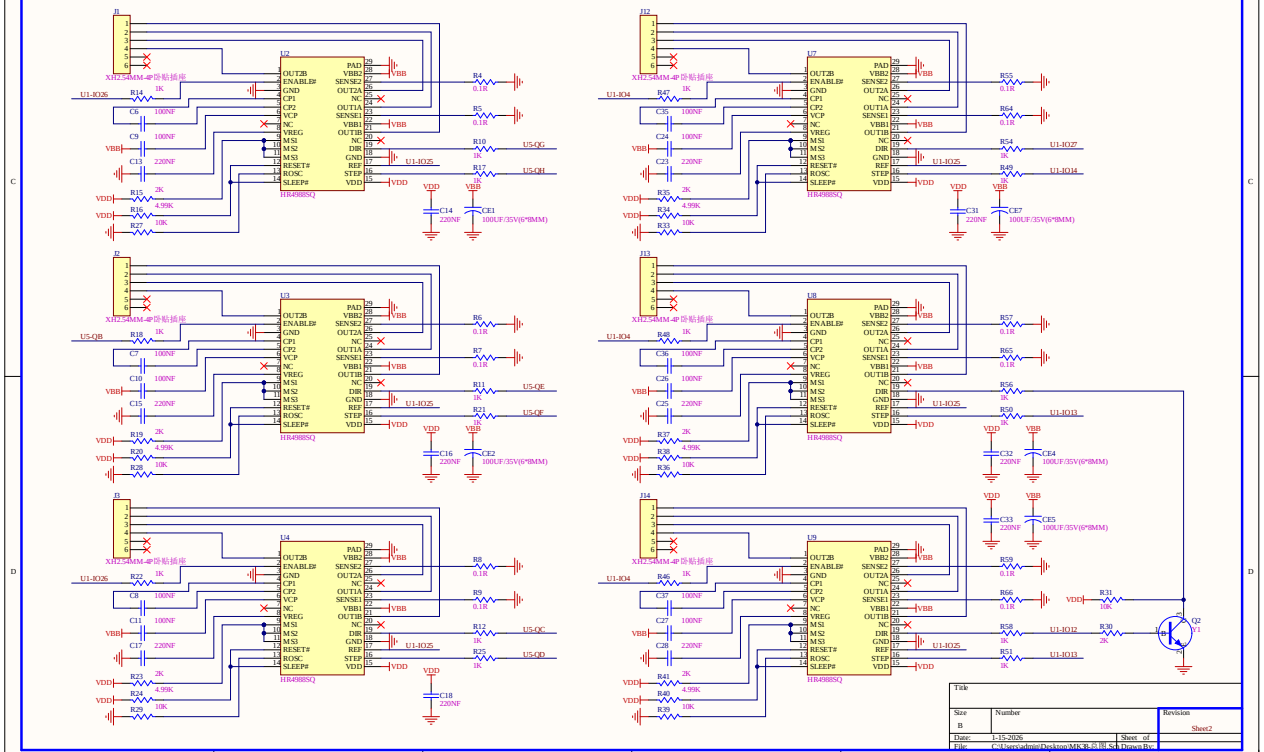

Title			
Size B	Number		Revision Sheet2
Date: 1-15-2026		Sheet of	
File: C:\Users\admin\Desktop\MK3R-5\图 Sch Draw Bo			