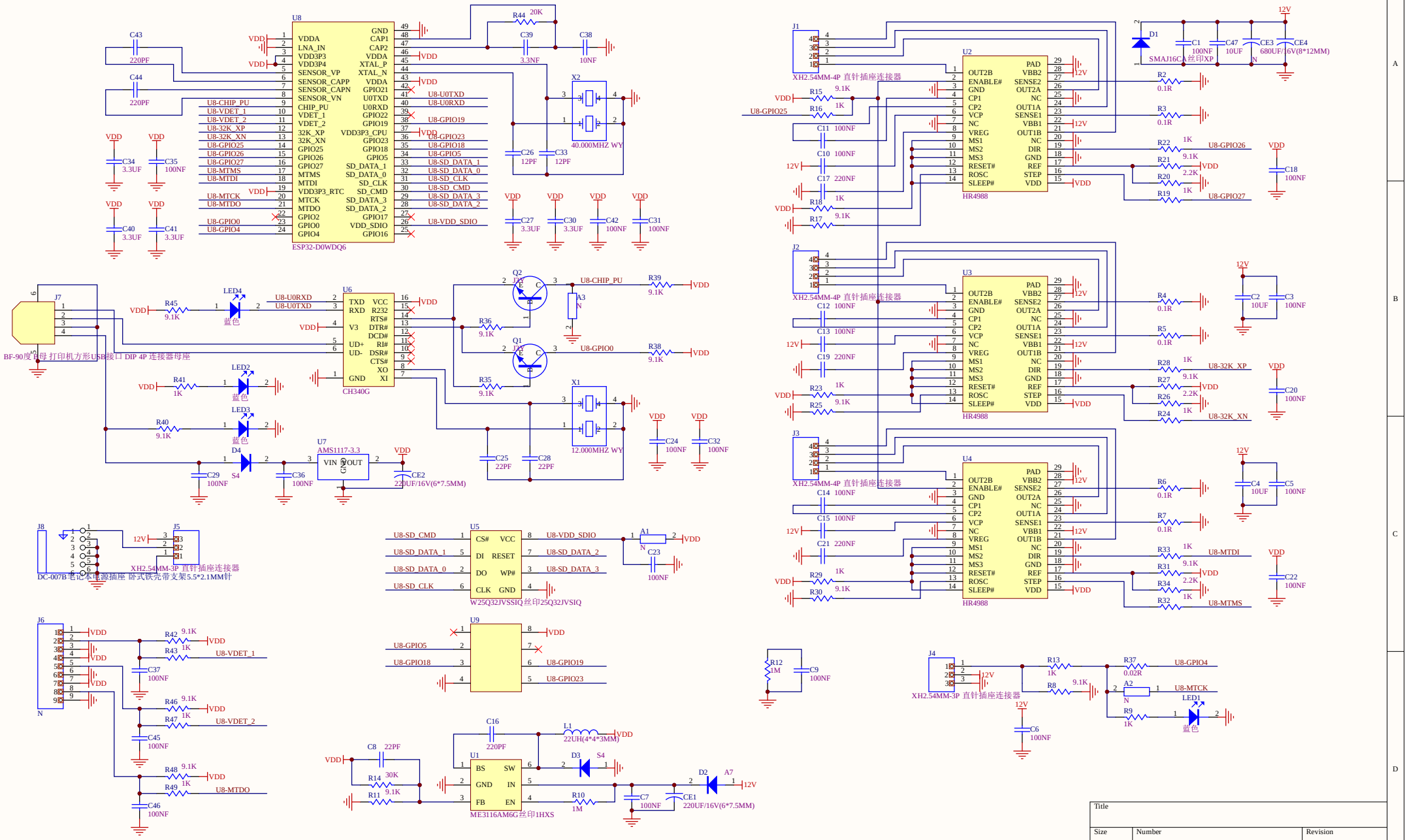

Title		
Size A3	Number	Revision
Date: 1/06/2026		Sheet of
File: C:\Users\..\DC12V.Sch		Drawn By: