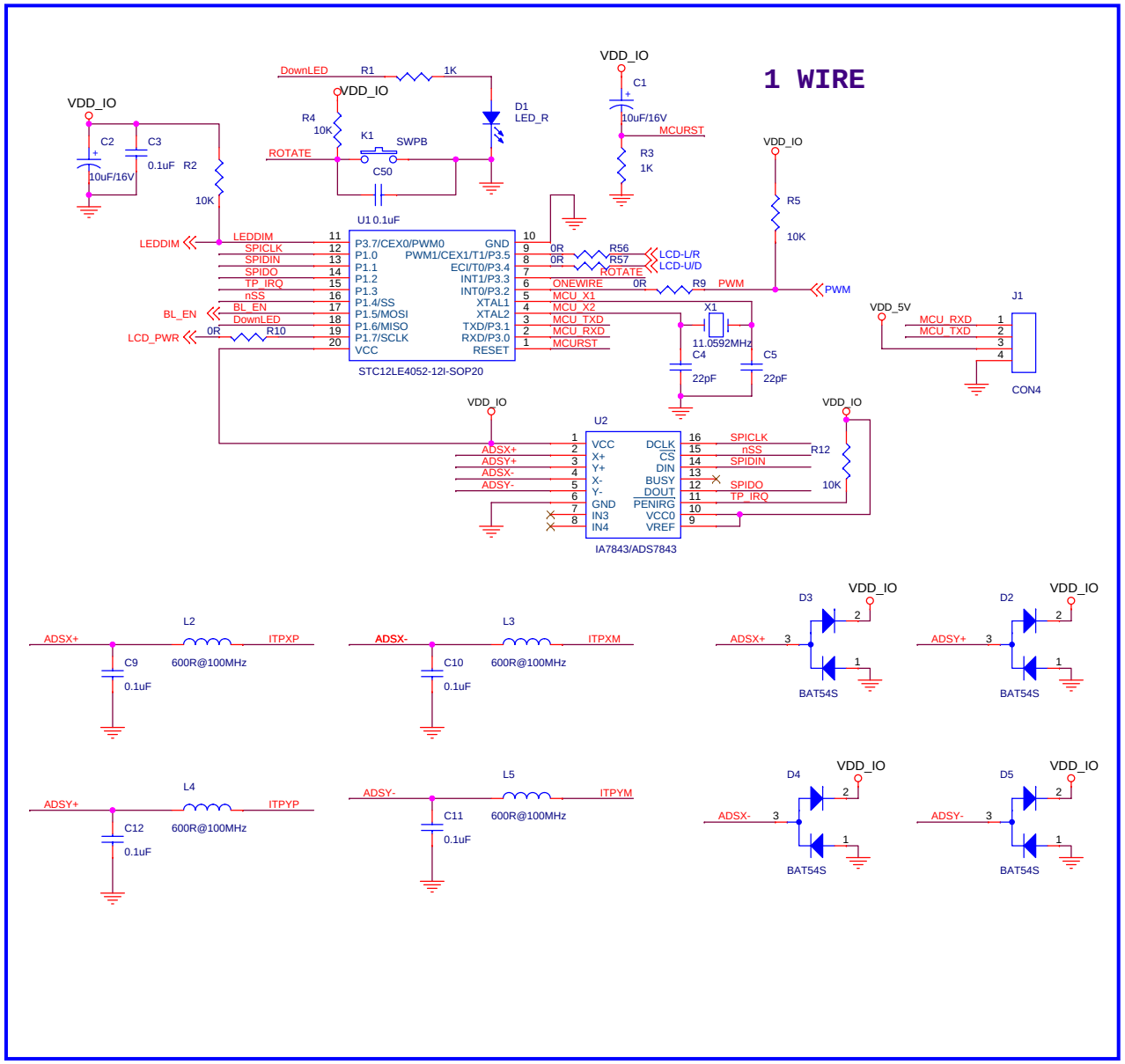

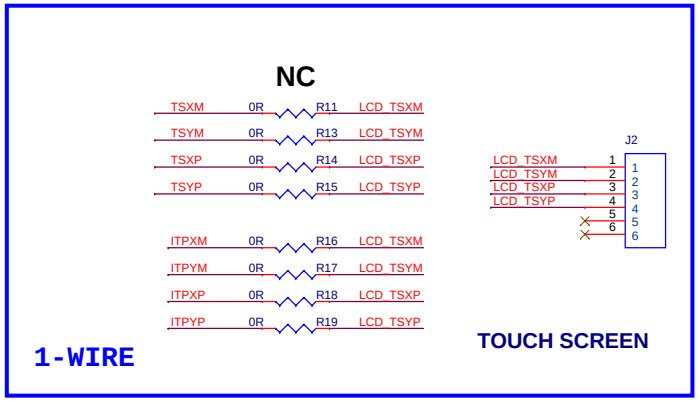

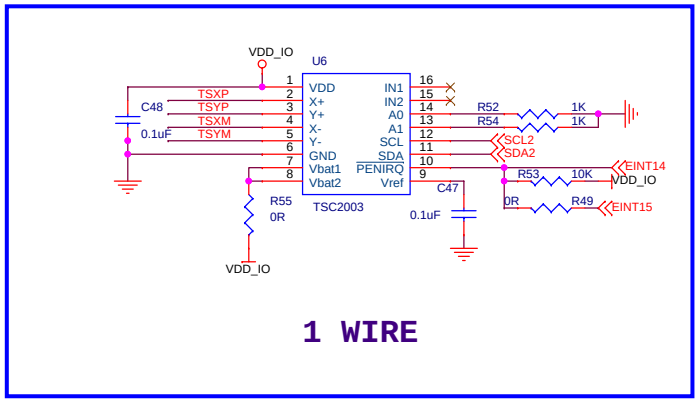

Title	<Title>	
Size A3	Document Number <Doc>	Rev <RevCode>
Date: Friday, August 17, 2012	Sheet 1 of 3	

SIGNAL TO LCD DRIVER

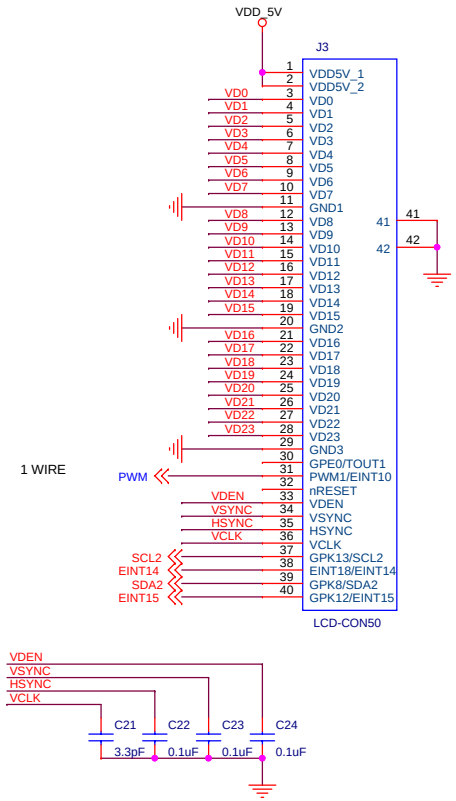

SIGNAL TO S70LCD

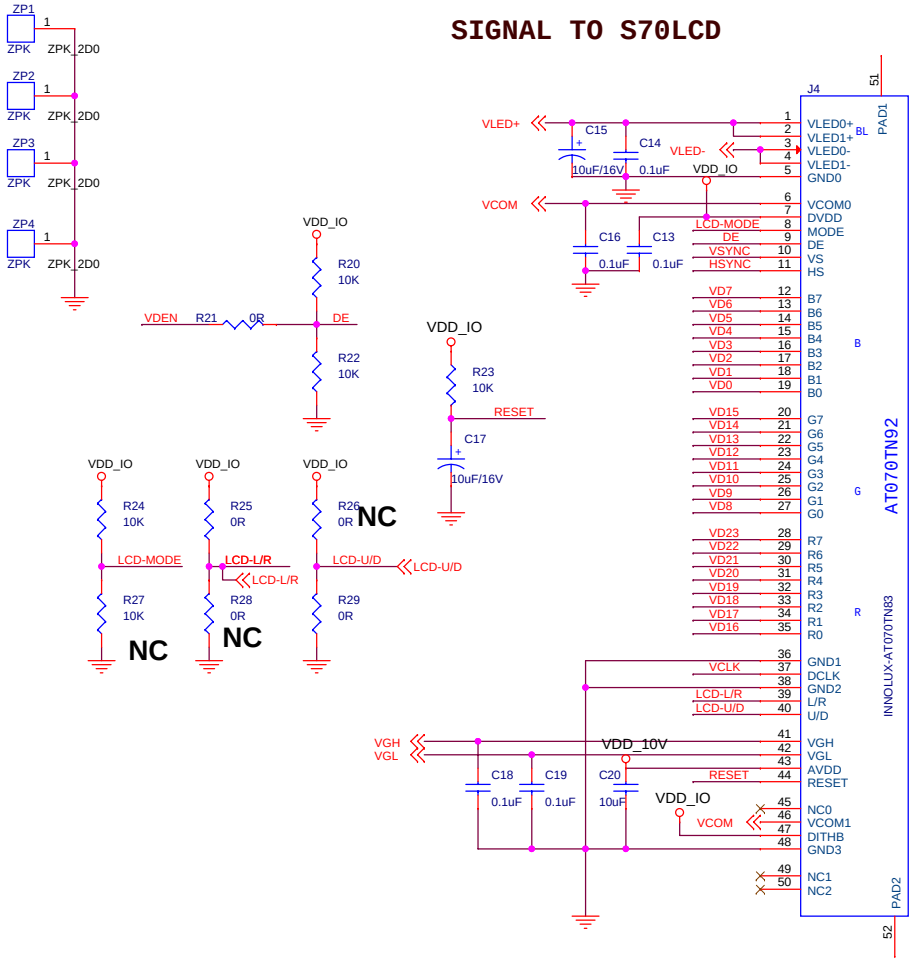

Title	<Title>	
Size A3	Document Number <Doc>	Rev <RevCode>
Date: Thursday, August 23, 2012	Sheet 2 of 3	

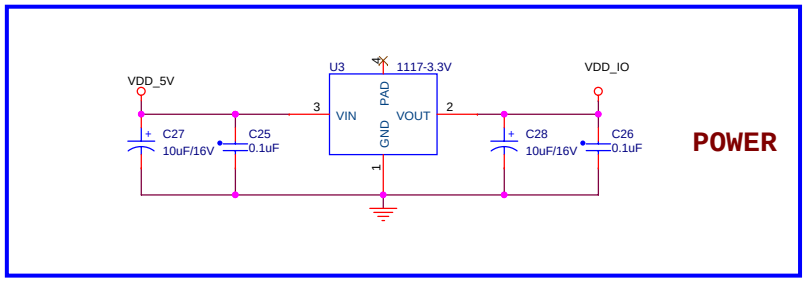

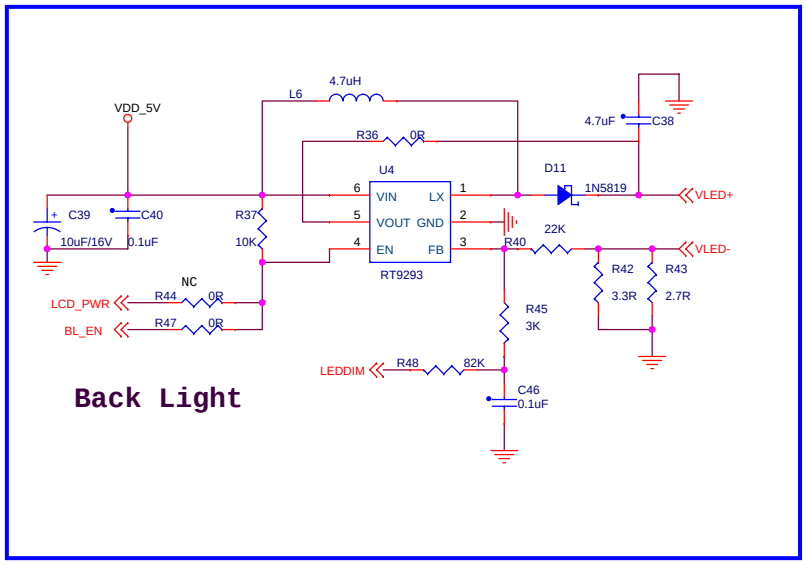

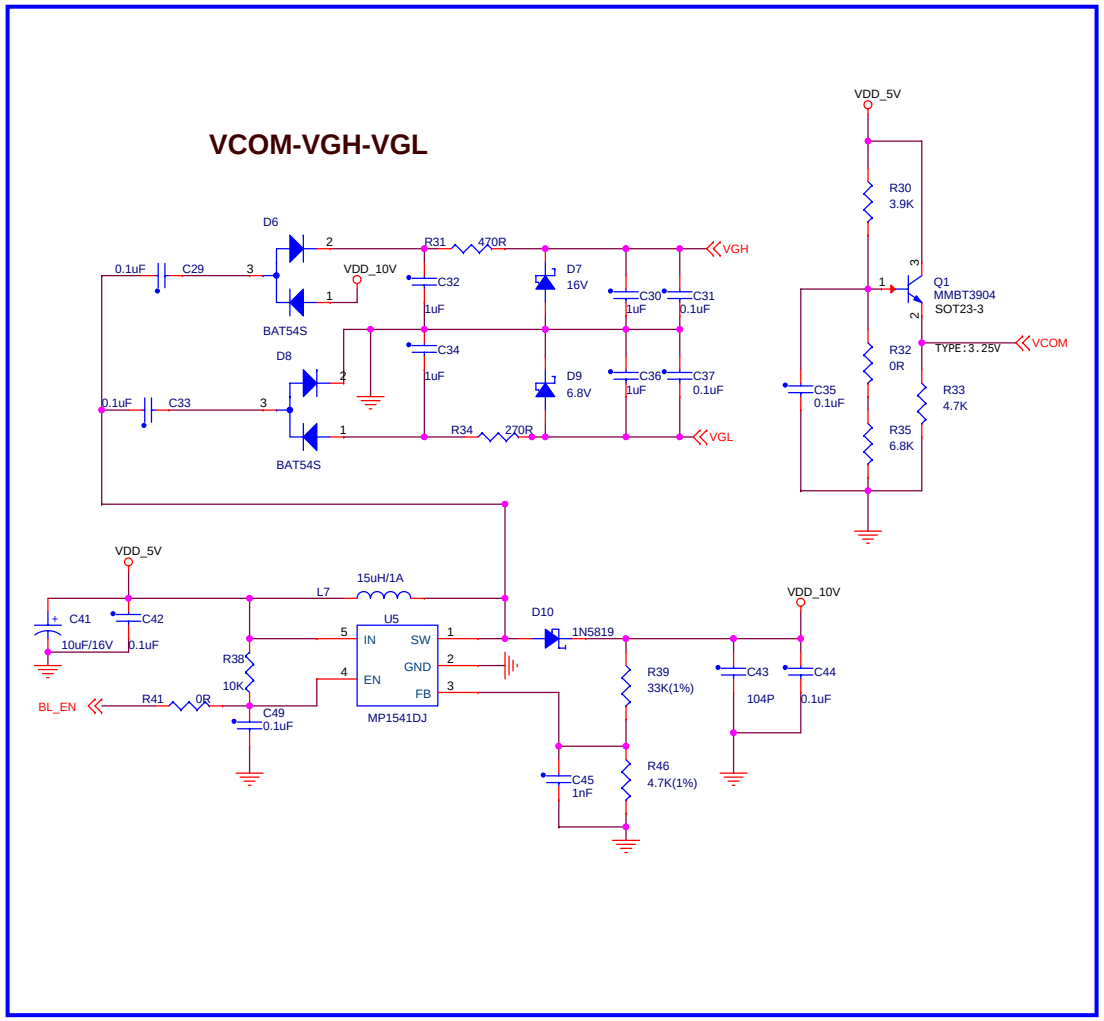

Title	<Title>	
Size A3	Document Number <Doc>	Rev <RevCode>
Date: Wednesday, September 19, 2012	Sheet 3 of 3	