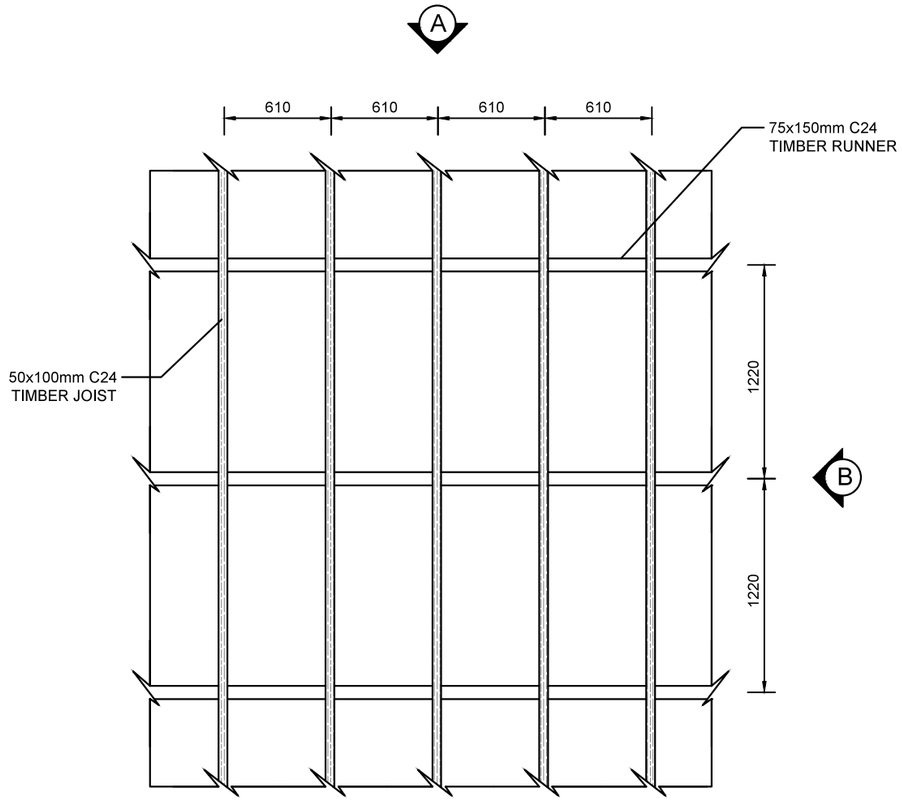

1 S1 PLAN VIEW
150mm THK SLAB

GENERAL NOTES:

1. THE DESIGN OF SHORING WORKS SHALL COMPLY WITH HONG KONG BUILDING (CONSTRUCTION) REGULATIONS 1990 AND CODE OD PRACTICE FOR THE STRUCTURAL USE OF STEEL 2005.
2. ALL DIMENSIONS ARE IN MILLIMETER UNLESS OTHERWISE STATED.
3. ALL TIMBER SHALL BE SOFTWOOD OF CLASS C24 TO BS4978.
4. ALL TIE RODS SHALL BE MILD STEEL BAR TO C52.
5. CONCRETE DENSITY TO BE 25KN/m³.
6. THE LOAD FROM SELF-WEIGHT OF DECK TO BE 0.5KN/m³.
7. CONSTRUCTION OPERATION LOAD TO BE 1.5KN/m³.

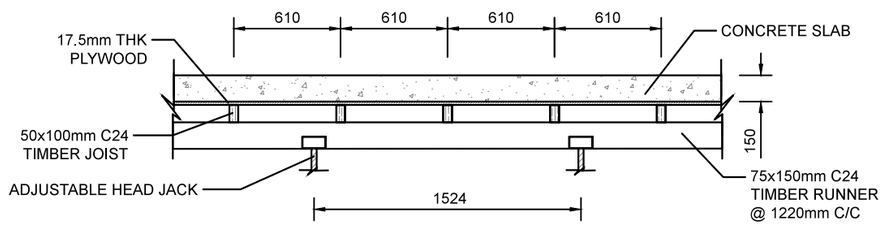

2 S1 ELEVATION A
150mm THK SLAB

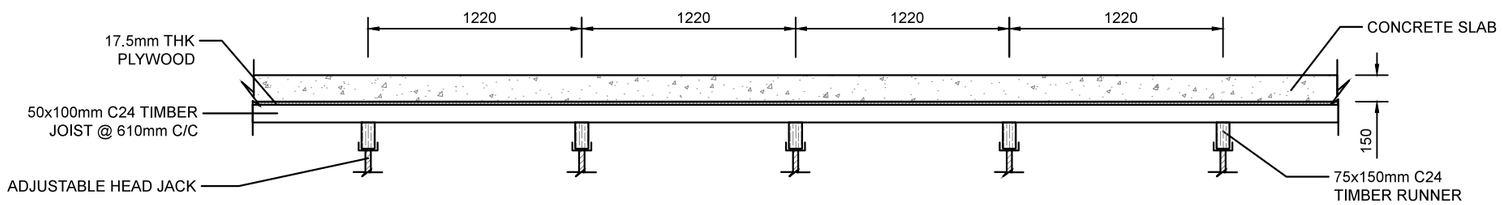

3 S1 ELEVATION B
150mm THK SLAB

NOTES:

1. ALL MEASUREMENT MUST BE CHECKED AT THE SITE — THIS DRAWING IS NOT VALID FOR CONSTRUCTION PURPOSE UNLESS EXPRESSLY CERTIFIED.
2. ALL DIMENSIONS ARE TO BE VERIFIED AND CHECKED ON SITE.
3. USE WRITTEN DIMENSIONS ONLY. DO NOT SCALE THIS DRAWING.
4. THIS DRAWING IS TO BE READ IN CONJECTION WITH ALL RELATED DRAWINGS.
5. UNLESS OTHERWISE INDICATED ALL LEVELS ARE RELATIVE TO HONG KONG PRINCIPAL DATUM.
6. ALL DIMENSIONS ARE IN MILLIMETER UNLESS OTHERWISE STATED.

THE SWEETESTLAND
AN ENGINEERING FIRM

PROJECT:
MA TAU CHUNG GOVERNMENT PRIMARY SCHOOL, NO.3, OI KING STEER, HUNG HOM, KOWLOON

DRAWING TITLE:
TIMBER FORMWORK FOR 150mm THK CONCRETE SLAB

DRAWN BY:	KCY	SCALE:	1:35
CHECKED BY:	YDZ	DATE:	2017-03-08
APPROVED BY:	YDZ		
DRAWING NO.	4393-S1	REV.	2

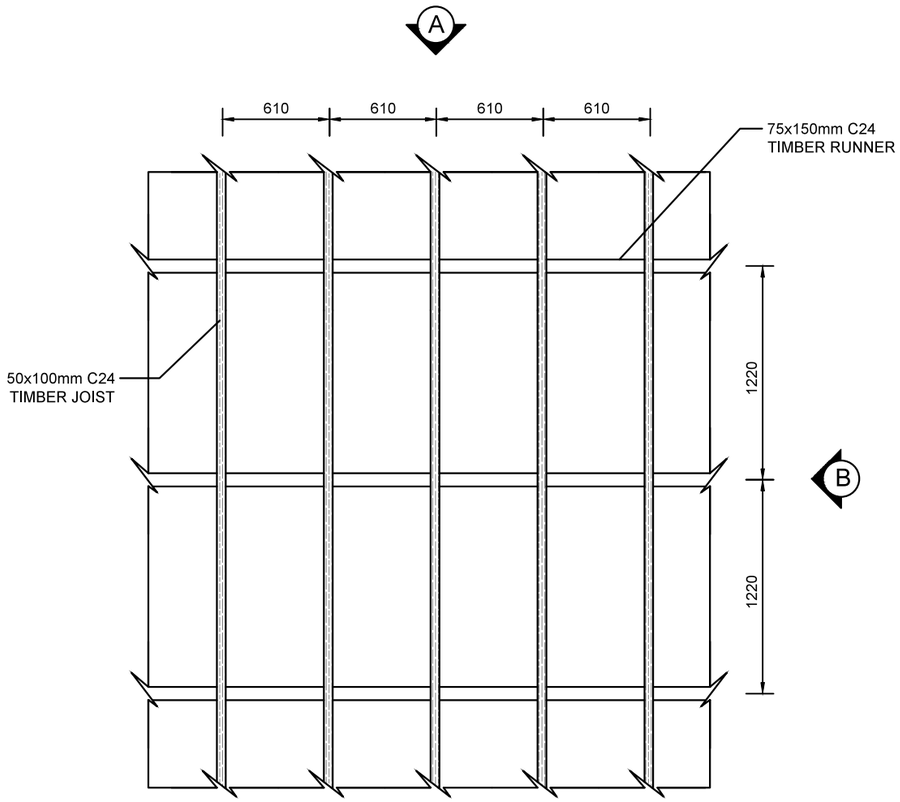

1 / S2 PLAN VIEW
200mm THK SLAB

GENERAL NOTES:

1. THE DESIGN OF SHORING WORKS SHALL COMPLY WITH HONG KONG BUILDING (CONSTRUCTION) REGULATIONS 1990 AND CODE OD PRACTICE FOR THE STRUCTURAL USE OF STEEL 2005.
2. ALL DIMENSIONS ARE IN MILLIMETER UNLESS OTHERWISE STATED.
3. ALL TIMBER SHALL BE SOFTWOOD OF CLASS C24 TO BS4978.
4. ALL TIE RODS SHALL BE MILD STEEL BAR TO C52.
5. CONCRETE DENSITY TO BE 25KN/m³.
6. THE LOAD FROM SELF-WEIGHT OF DECK TO BE 0.5KN/m³.
7. CONSTRUCTION OPERATION LOAD TO BE 1.5KN/m³.

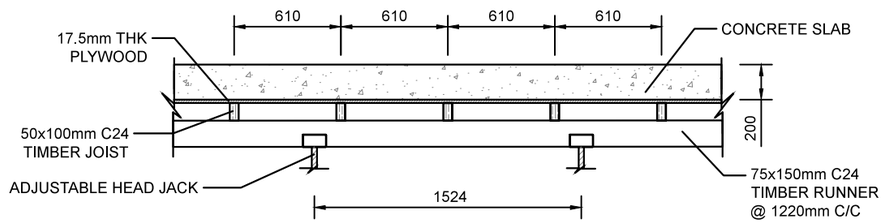

2 / S2 ELEVATION A
200mm THK SLAB

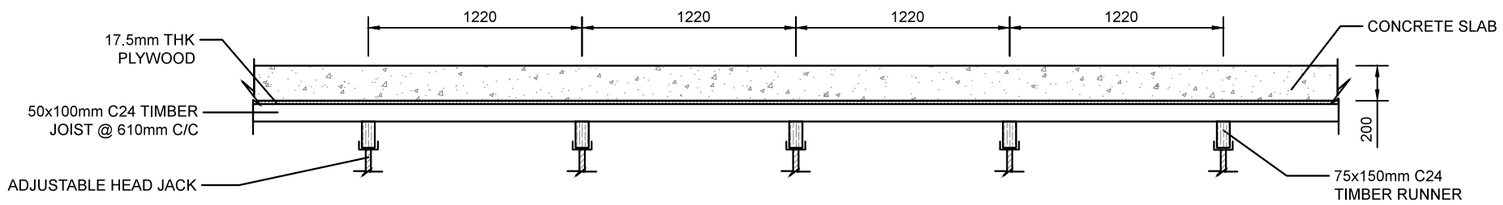

3 / S2 ELEVATION B
200mm THK SLAB

NOTES:

1. ALL MEASUREMENT MUST BE CHECKED AT THE SITE — THIS DRAWING IS NOT VALID FOR CONSTRUCTION PURPOSE UNLESS EXPRESSLY CERTIFIED.
2. ALL DIMENSIONS ARE TO BE VERIFIED AND CHECKED ON SITE.
3. USE WRITTEN DIMENSIONS ONLY. DO NOT SCALE THIS DRAWING.
4. THIS DRAWING IS TO BE READ IN CONJECTION WITH ALL RELATED DRAWINGS.
5. UNLESS OTHERWISE INDICATED ALL LEVELS ARE RELATIVE TO HONG KONG PRINCIPAL DATUM.
6. ALL DIMENSIONS ARE IN MILLIMETER UNLESS OTHERWISE STATED.

THE SWEETESTLAND
AN ENGINEERING FIRM

PROJECT:
MA TAU CHUNG GOVERNMENT PRIMARY SCHOOL, NO.3, OI KING STEER, HUNG HOM, KOWLOON

DRAWING TITLE:
TIMBER FORMWORK FOR 200mm THK CONCRETE SLAB

DRAWN BY:	KCY	SCALE:	1:35
CHECKED BY:	YDZ	DATE:	2017-03-08
APPROVED BY:	YDZ		
DRAWING NO.	4393-S2	REV.	2

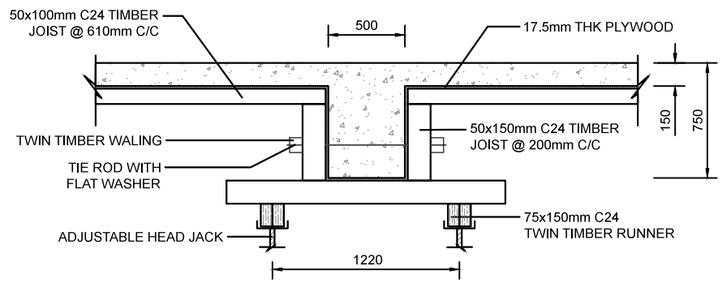

1 / B1 FRONT VIEW
750x500mm 1B72 BEAM

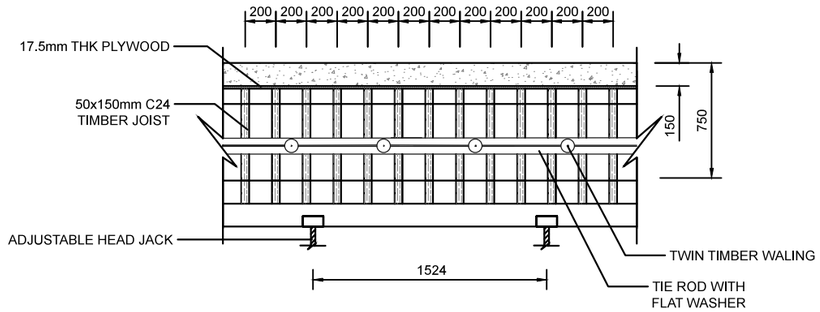

2 / B1 ELEVATION A
750x500mm 1B72 BEAM

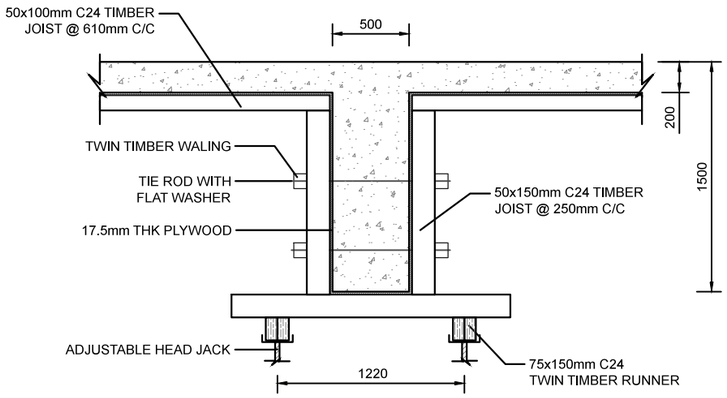

3 / B2 FRONT VIEW
1500x500mm 7B36 BEAM

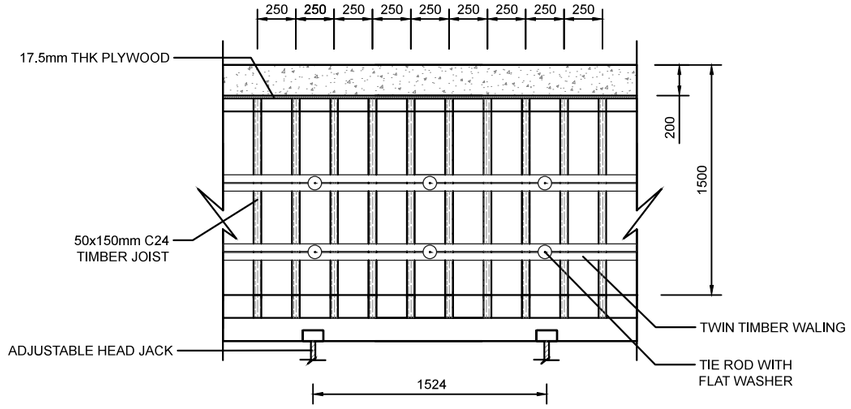

4 / B2 ELEVATION B
1500x500mm 7B36 BEAM

GENERAL NOTES:

1. THE DESIGN OF SHORING WORKS SHALL COMPLY WITH HONG KONG BUILDING (CONSTRUCTION) REGULATIONS 1990 AND CODE OD PRACTICE FOR THE STRUCTURAL USE OF STEEL 2005.
2. ALL DIMENSIONS ARE IN MILLIMETER UNLESS OTHERWISE STATED.
3. ALL TIMBER SHALL BE SOFTWOOD OF CLASS C24 TO BS4978.
4. ALL TIE RODS SHALL BE MILD STEEL BAR TO C52.
5. ALL STEEL TO BE GRADE 43A MINIMUM TO BS4360.
6. ALL WELD SHALL BE 4mm FILLET WELD TO BS5135.
7. CONCRETE DENSITY TO BE 25KN/m³.
8. AVERAGE CONCRETING RATE TO BE 4.8m³/hr.

NOTES:

1. ALL MEASUREMENT MUST BE CHECKED AT THE SITE — THIS DRAWING IS NOT VALID FOR CONSTRUCTION PURPOSE UNLESS EXPRESSLY CERTIFIED.
2. ALL DIMENSIONS ARE TO BE VERIFIED AND CHECKED ON SITE.
3. USE WRITTEN DIMENSIONS ONLY. DO NOT SCALE THIS DRAWING.
4. THIS DRAWING IS TO BE READ IN CONJECTION WITH ALL RELATED DRAWINGS.
5. UNLESS OTHERWISE INDICATED ALL LEVELS ARE RELATIVE TO HONG KONG PRINCIPAL DATUM.
6. ALL DIMENSIONS ARE IN MILLIMETER UNLESS OTHERWISE STATED.

THE SWEETESTLAND
AN ENGINEERING FIRM

PROJECT:
MA TAU CHUNG GOVERNMENT PRIMARY SCHOOL, NO.3, OI KING STEER, HUNG HOM, KOWLOON

DRAWING TITLE:
TIMBER FORMWORK FOR 750x500mm AND 1500x500mm CONCRETE BEAMS

DRAWN BY:	KCY	SCALE:	1:40
CHECKED BY:	YDZ	DATE:	2017-03-08
APPROVED BY:	YDZ		
DRAWING NO.	4393-B1&B2	REV.	2

GENERAL NOTES:

1. THE DESIGN OF SHORING WORKS SHALL COMPLY WITH HONG KONG BUILDING (CONSTRUCTION) REGULATIONS 1990 AND CODE OD PRACTICE FOR THE STRUCTURAL USE OF STEEL 2005.
2. ALL DIMENSIONS ARE IN MILLIMETER UNLESS OTHERWISE STATED.
3. ALL TIMBER STUDS SHALL BE SOFTWOOD OF CLASS C24 TO BS4978.
4. ALL TIMBER WALING SHALL BE SOFTWOOD OF CLASS C16 TO BS4978.
5. ALL TIE RODS SHALL BE MILD STEEL BAR TO C52.
6. ALL STEEL TO BE GRADE 43A MINIMUM TO BS4360.
7. ALL WELD SHALL BE 4mm FILLET WELD TO BS5135.
8. CONCRETE DENSITY TO BE 25KN/m³.
9. AVERAGE CONCRETING RATE TO BE 4.8m³/hr.

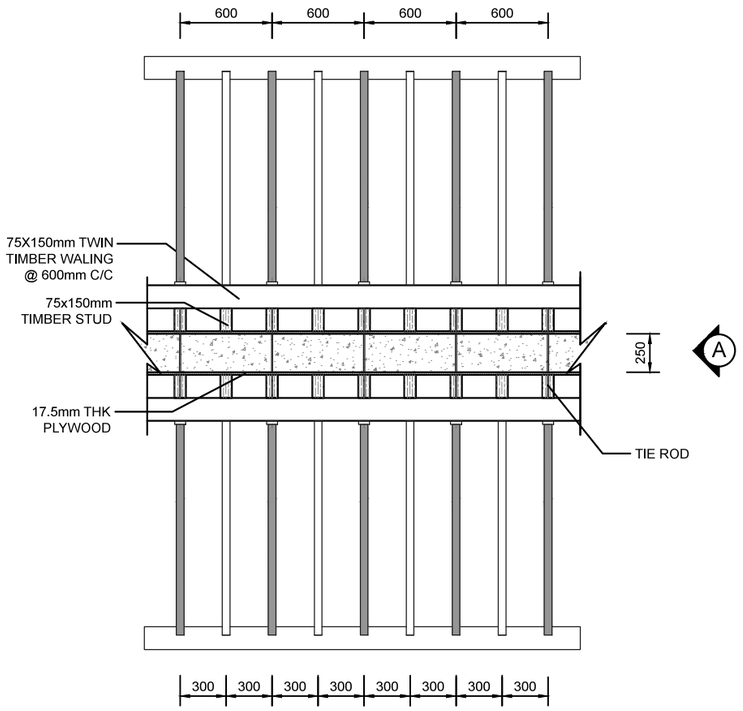

1 W1 PLAN VIEW
250mm THK WALL

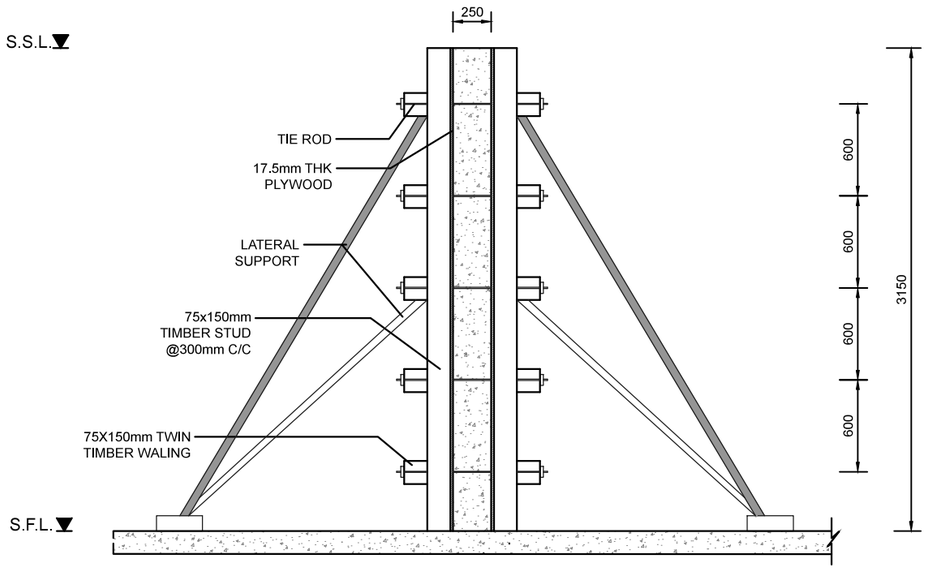

2 W1 ELEVATION A
250mm THK WALL

NOTES:

1. ALL MEASUREMENT MUST BE CHECKED AT THE SITE — THIS DRAWING IS NOT VALID FOR CONSTRUCTION PURPOSE UNLESS EXPRESSLY CERTIFIED.
2. ALL DIMENSIONS ARE TO BE VERIFIED AND CHECKED ON SITE.
3. USE WRITTEN DIMENSIONS ONLY. DO NOT SCALE THIS DRAWING.
4. THIS DRAWING IS TO BE READ IN CONJECTION WITH ALL RELATED DRAWINGS.
5. UNLESS OTHERWISE INDICATED ALL LEVELS ARE RELATIVE TO HONG KONG PRINCIPAL DATUM.
6. ALL DIMENSIONS ARE IN MILLIMETER UNLESS OTHERWISE STATED.

THE SWEETESTLAND
AN ENGINEERING FIRM

PROJECT:
MA TAU CHUNG GOVERNMENT PRIMARY SCHOOL, NO.3, OI KING STEER, HUNG HOM, KOWLOON

DRAWING TITLE:
TIMBER FORMWORK FOR 250mm THK CONCRETE WALL

DRAWN BY:	KCY	SCALE:	1:40
CHECKED BY:	YDZ	DATE:	2017-03-09
APPROVED BY:	YDZ		
DRAWING NO.	4393-W1	REV.	1

GENERAL NOTES:

1. THE DESIGN OF SHORING WORKS SHALL COMPLY WITH HONG KONG BUILDING (CONSTRUCTION) REGULATIONS 1990 AND CODE OD PRACTICE FOR THE STRUCTURAL USE OF STEEL 2005.
2. ALL DIMENSIONS ARE IN MILLIMETER UNLESS OTHERWISE STATED.
3. ALL TIMBER STUDS SHALL BE SOFTWOOD OF CLASS C16 TO BS4978.
4. ALL TIMBER WALING SHALL BE SOFTWOOD OF CLASS C24 TO BS4978.
5. ALL TIE RODS SHALL BE MILD STEEL BAR TO C52.
6. ALL STEEL TO BE GRADE 43A MINIMUM TO BS4360.
7. ALL WELD SHALL BE 4mm FILLET WELD TO BS5135.
8. CONCRETE DENSITY TO BE 25KN/m³.
9. AVERAGE CONCRETING RATE TO BE 4.8m³/hr.

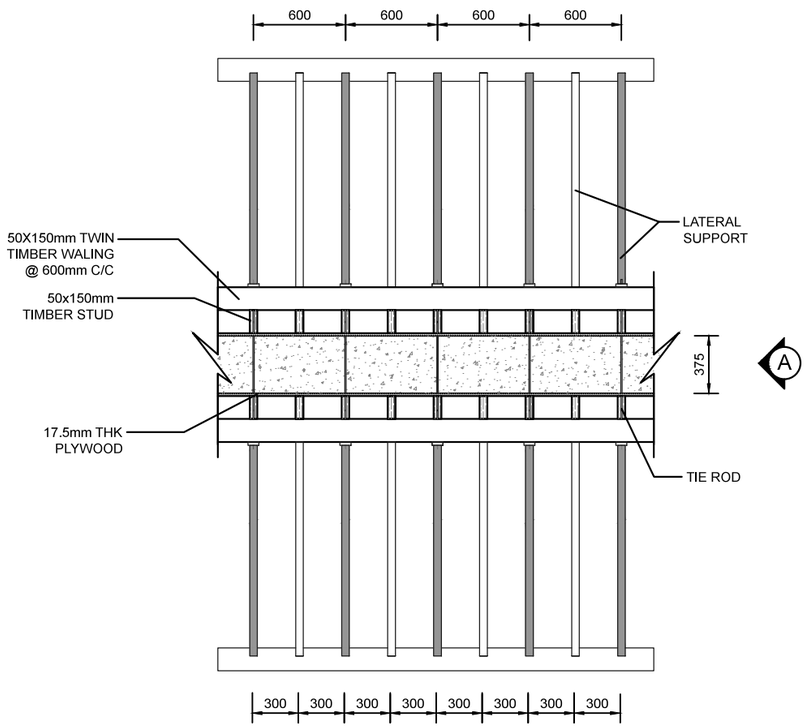

1 W2 PLAN VIEW
375mm THK WALL

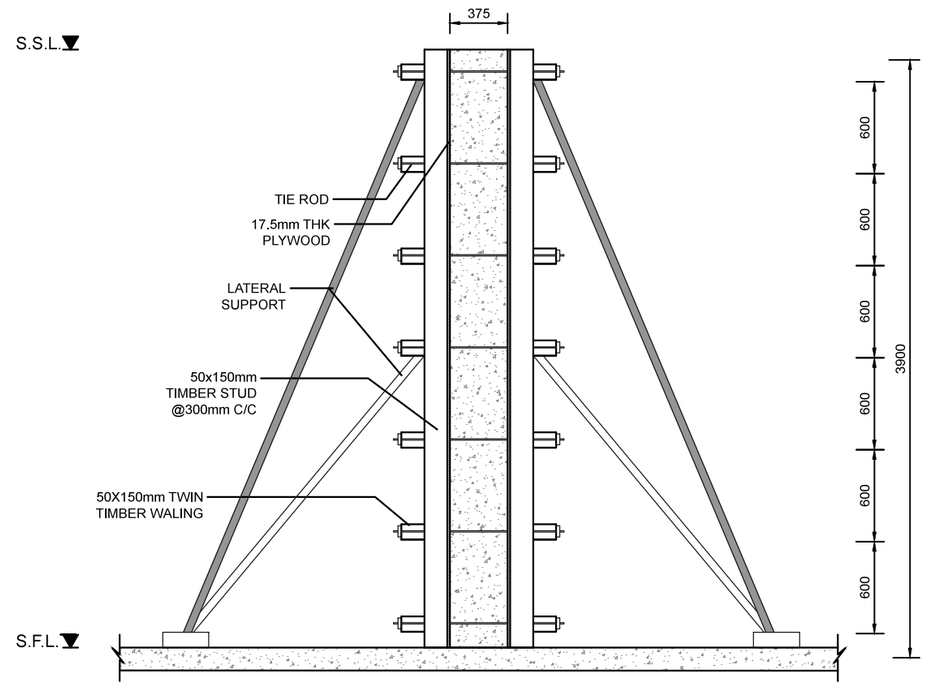

2 W2 ELEVATION A
375mm THK WALL

NOTES:

1. ALL MEASUREMENT MUST BE CHECKED AT THE SITE — THIS DRAWING IS NOT VALID FOR CONSTRUCTION PURPOSE UNLESS EXPRESSLY CERTIFIED.
2. ALL DIMENSIONS ARE TO BE VERIFIED AND CHECKED ON SITE.
3. USE WRITTEN DIMENSIONS ONLY. DO NOT SCALE THIS DRAWING.
4. THIS DRAWING IS TO BE READ IN CONJECTION WITH ALL RELATED DRAWINGS.
5. UNLESS OTHERWISE INDICATED ALL LEVELS ARE RELATIVE TO HONG KONG PRINCIPAL DATUM.
6. ALL DIMENSIONS ARE IN MILLIMETER UNLESS OTHERWISE STATED.

THE SWEETESTLAND
AN ENGINEERING FIRM

PROJECT:
MA TAU CHUNG GOVERNMENT PRIMARY SCHOOL, NO.3, OI KING STEER, HUNG HOM, KOWLOON

DRAWING TITLE:
TIMBER FORMWORK FOR 375mm THK CONCRETE WALL

DRAWN BY:	KCY	SCALE:	1:40
CHECKED BY:	YDZ	DATE:	2017-03-09
APPROVED BY:	YDZ		
DRAWING NO.	4393-W2	REV.	1

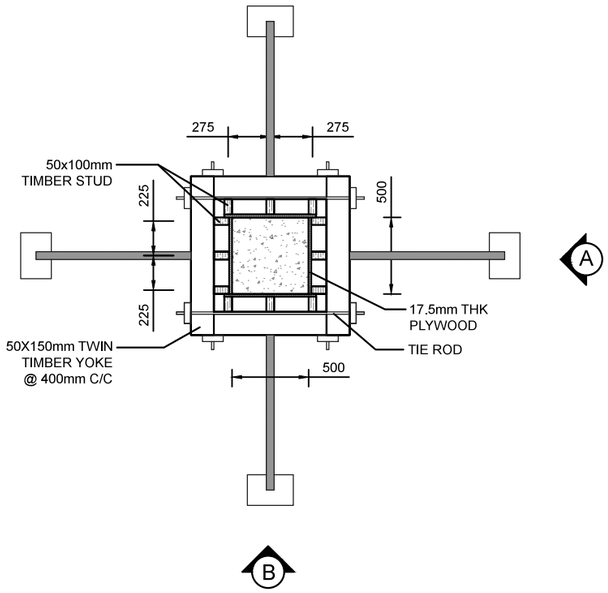

1 C1 PLAN VIEW
500x500mm COLUMN

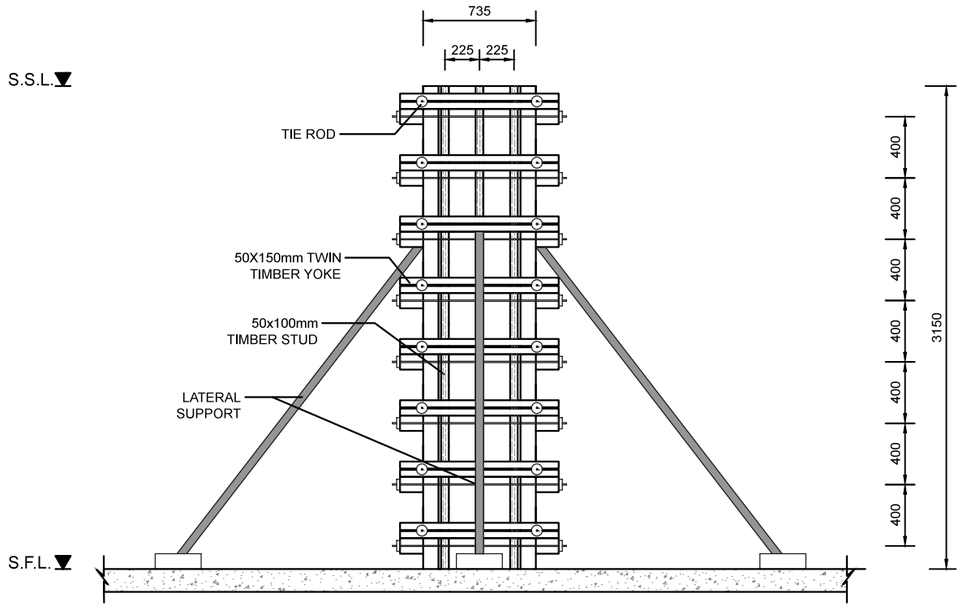

2 C1 ELEVATION A
500x500mm COLUMN

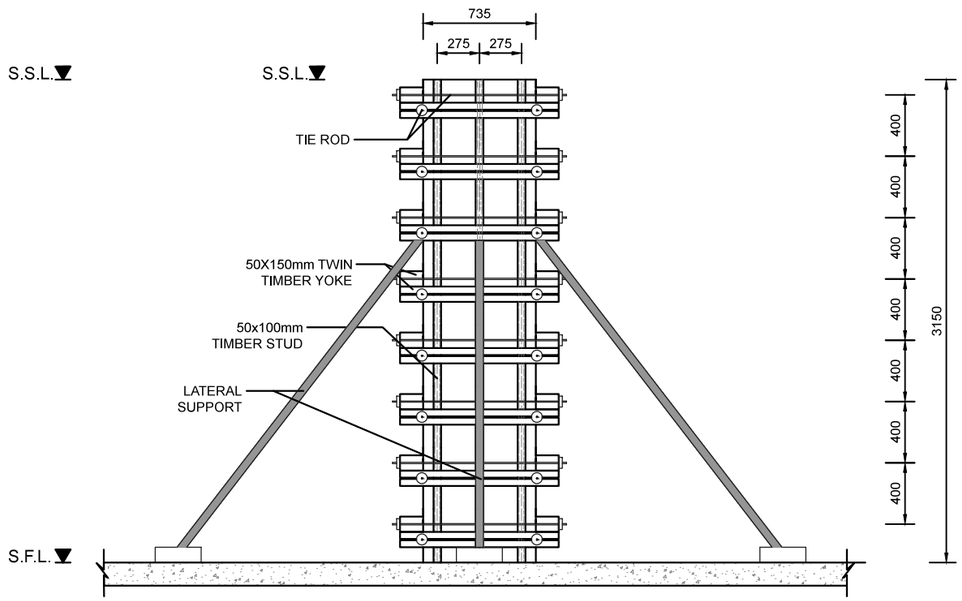

3 C1 ELEVATION B
500x500mm COLUMN

GENERAL NOTES:

1. THE DESIGN OF SHORING WORKS SHALL COMPLY WITH HONG KONG BUILDING (CONSTRUCTION) REGULATIONS 1990 AND CODE OD PRACTICE FOR THE STRUCTURAL USE OF STEEL 2005.
2. ALL DIMENSIONS ARE IN MILLIMETER UNLESS OTHERWISE STATED.
3. ALL TIMBER STUDS SHALL BE SOFTWOOD OF CLASS C16 TO BS4978.
4. ALL TIMBER YOKES SHALL BE SOFTWOOD OF CLASS C24 TO BS4978.
5. ALL TIE RODS SHALL BE MILD STEEL BAR TO C52.
6. CONCRETE DENSITY TO BE 25KN/m³.
7. AVERAGE CONCRETING RATE TO BE 2m³/hr.
8. BOLTS SHALL BE USED AT THE CONJUNCTION OF THE YOKE IN ORDER TO INCREASE THE STABILITY OF THE YOKE TO MAINTAIN ITS RECTANGULAR SHAPE.

NOTES:

1. ALL MEASUREMENT MUST BE CHECKED AT THE SITE — THIS DRAWING IS NOT VALID FOR CONSTRUCTION PURPOSE UNLESS EXPRESSLY CERTIFIED.
2. ALL DIMENSIONS ARE TO BE VERIFIED AND CHECKED ON SITE.
3. USE WRITTEN DIMENSIONS ONLY. DO NOT SCALE THIS DRAWING.
4. THIS DRAWING IS TO BE READ IN CONJECTION WITH ALL RELATED DRAWINGS.
5. UNLESS OTHERWISE INDICATED ALL LEVELS ARE RELATIVE TO HONG KONG PRINCIPAL DATUM.
6. ALL DIMENSIONS ARE IN MILLIMETER UNLESS OTHERWISE STATED.

THE SWEETESTLAND
AN ENGINEERING FIRM

PROJECT:
MA TAU CHUNG GOVERNMENT PRIMARY SCHOOL, NO.3, OI KING STEER, HUNG HOM, KOWLOON

DRAWING TITLE:
TIMBER FORMWORK FOR 500x500mm CONCRETE COLUMN

DRAWN BY:	KCY	SCALE:	1:40
CHECKED BY:	YDZ	DATE:	2017-03-09
APPROVED BY:	YDZ		
DRAWING NO.	4393-C1	REV.	1

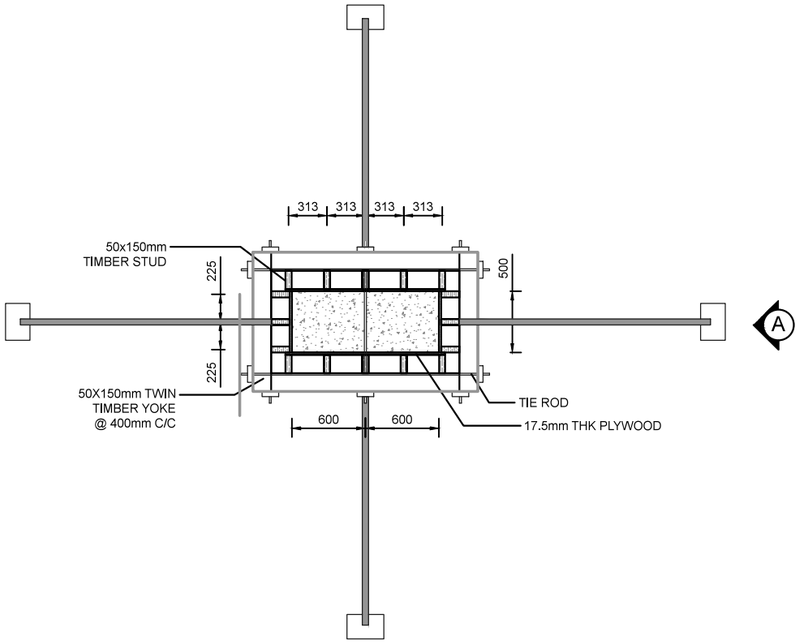

1 C2 PLAN VIEW
1200x500mm COLUMN

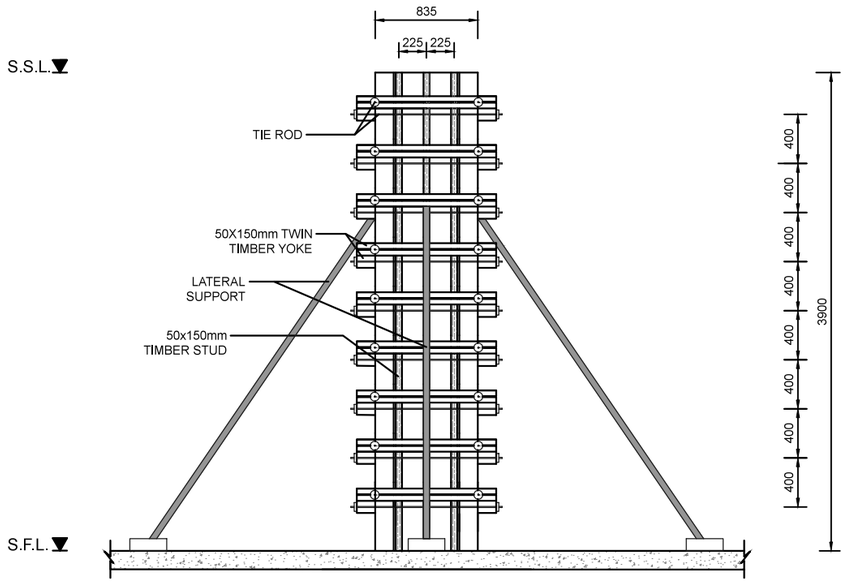

2 C2 ELEVATION A
1200x500mm COLUMN

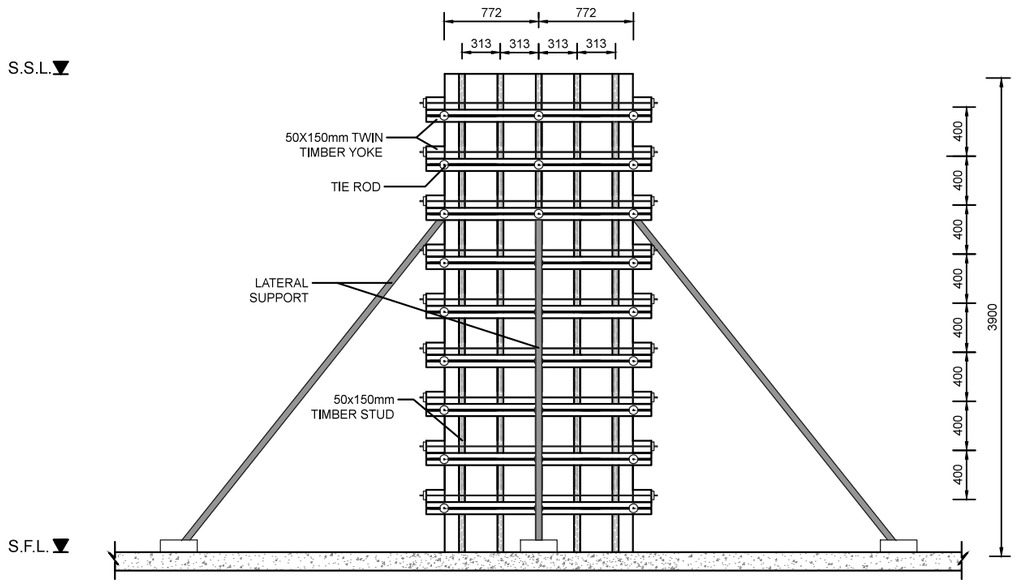

3 C2 ELEVATION B
1200x500mm COLUMN

GENERAL NOTES:

1. THE DESIGN OF SHORING WORKS SHALL COMPLY WITH HONG KONG BUILDING (CONSTRUCTION) REGULATIONS 1990 AND CODE OD PRACTICE FOR THE STRUCTURAL USE OF STEEL 2005.
2. ALL DIMENSIONS ARE IN MILLIMETER UNLESS OTHERWISE STATED.
3. ALL TIMBER STUDS SHALL BE SOFTWOOD OF CLASS C16 TO BS4978.
4. ALL TIMBER YOKES SHALL BE SOFTWOOD OF CLASS C24 TO BS4978.
5. ALL TIE RODS SHALL BE MILD STEEL BAR TO C52.
6. CONCRETE DENSITY TO BE 25KN/m³.
7. AVERAGE CONCRETING RATE TO BE 2m³/hr.
8. BOLTS SHALL BE USED AT THE CONJUNCTION OF THE YOKE IN ORDER TO INCREASE THE STABILITY OF THE YOKE TO MAINTAIN ITS RECTANGULAR SHAPE.

NOTES:

1. ALL MEASUREMENT MUST BE CHECKED AT THE SITE — THIS DRAWING IS NOT VALID FOR CONSTRUCTION PURPOSE UNLESS EXPRESSLY CERTIFIED.
2. ALL DIMENSIONS ARE TO BE VERIFIED AND CHECKED ON SITE.
3. USE WRITTEN DIMENSIONS ONLY. DO NOT SCALE THIS DRAWING.
4. THIS DRAWING IS TO BE READ IN CONJECTION WITH ALL RELATED DRAWINGS.
5. UNLESS OTHERWISE INDICATED ALL LEVELS ARE RELATIVE TO HONG KONG PRINCIPAL DATUM.
6. ALL DIMENSIONS ARE IN MILLIMETER UNLESS OTHERWISE STATED.

THE SWEETESTLAND
AN ENGINEERING FIRM

PROJECT:
MA TAU CHUNG GOVERNMENT PRIMARY SCHOOL, NO.3, OI KING STEER, HUNG HOM, KOWLOON

DRAWING TITLE:
TIMBER FORMWORK FOR 1200x500mm CONCRETE COLUMN

DRAWN BY:	KCY	SCALE:	1:50
CHECKED BY:	YDZ	DATE:	2017-03-09
APPROVED BY:	YDZ		
DRAWING NO.	4393-C2	REV.	1

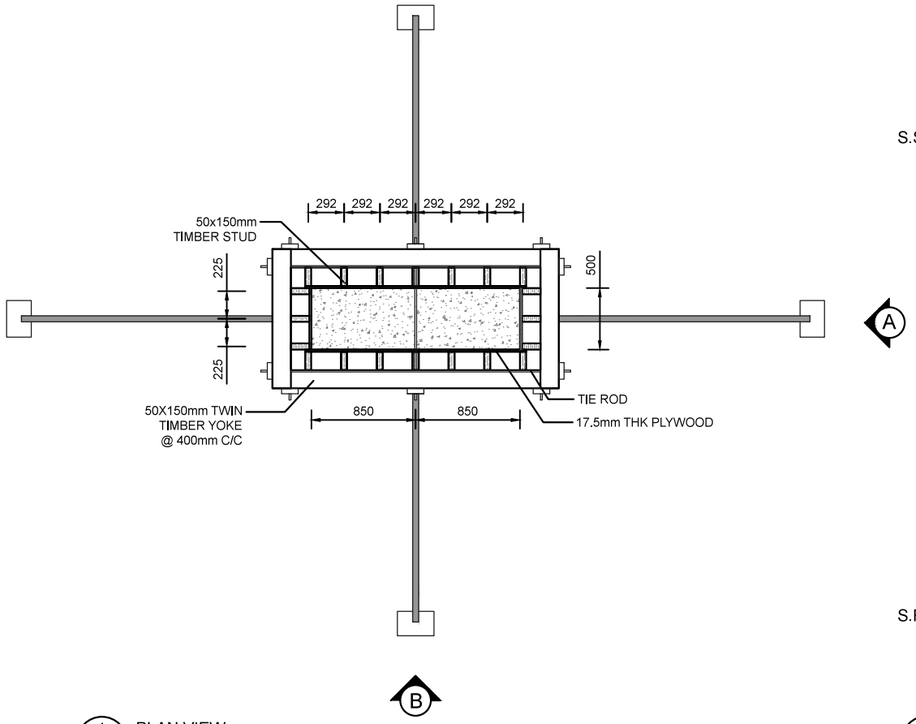

1 C3 PLAN VIEW
1700x500mm COLUMN

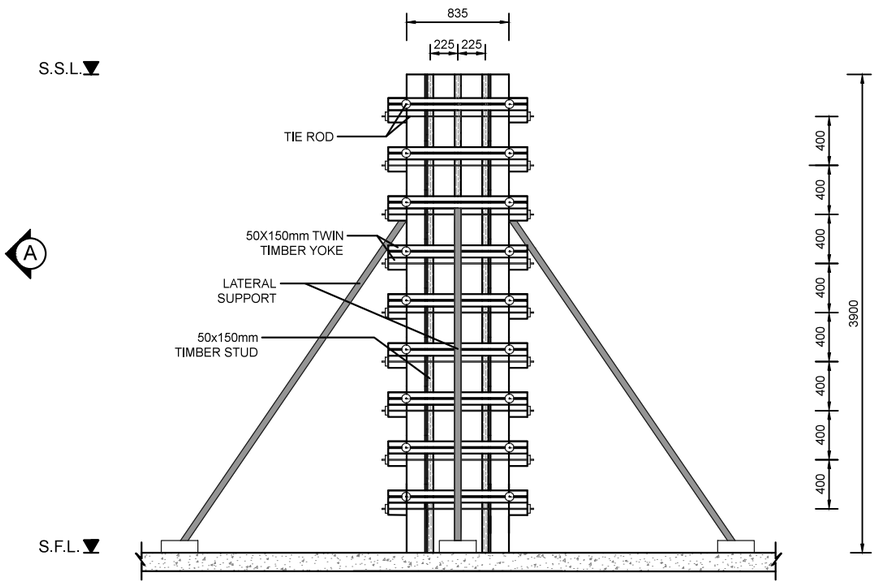

2 C3 ELEVATION A
1700x500mm COLUMN

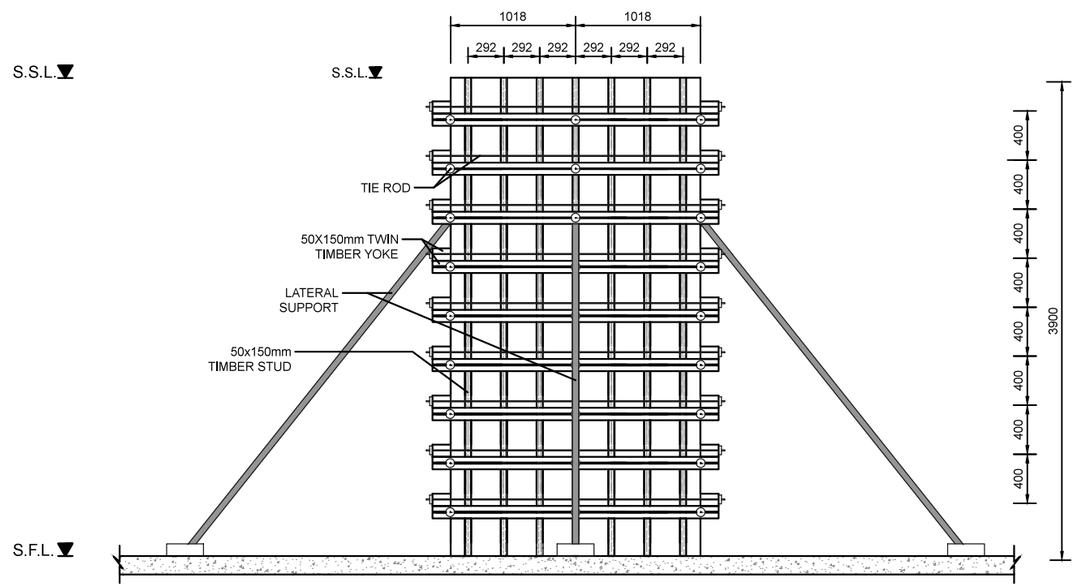

3 C3 ELEVATION B
1700x500mm COLUMN

GENERAL NOTES:

1. THE DESIGN OF SHORING WORKS SHALL COMPLY WITH HONG KONG BUILDING (CONSTRUCTION) REGULATIONS 1990 AND CODE OD PRACTICE FOR THE STRUCTURAL USE OF STEEL 2005.
2. ALL DIMENSIONS ARE IN MILLIMETER UNLESS OTHERWISE STATED.
3. ALL TIMBER STUDS SHALL BE SOFTWOOD OF CLASS C16 TO BS4978.
4. ALL TIMBER YOKES SHALL BE SOFTWOOD OF CLASS C24 TO BS4978.
5. ALL TIE RODS SHALL BE MILD STEEL BAR TO C52.
6. CONCRETE DENSITY TO BE 25KN/m³.
7. AVERAGE CONCRETING RATE TO BE 2m³/hr.
8. BOLTS SHALL BE USED AT THE CONJUNCTION OF THE YOKE IN ORDER TO INCREASE THE STABILITY OF THE YOKE TO MAINTAIN ITS RECTANGULAR SHAPE.

NOTES:

1. ALL MEASUREMENT MUST BE CHECKED AT THE SITE — THIS DRAWING IS NOT VALID FOR CONSTRUCTION PURPOSE UNLESS EXPRESSLY CERTIFIED.
2. ALL DIMENSIONS ARE TO BE VERIFIED AND CHECKED ON SITE.
3. USE WRITTEN DIMENSIONS ONLY. DO NOT SCALE THIS DRAWING.
4. THIS DRAWING IS TO BE READ IN CONJECTION WITH ALL RELATED DRAWINGS.
5. UNLESS OTHERWISE INDICATED ALL LEVELS ARE RELATIVE TO HONG KONG PRINCIPAL DATUM.
6. ALL DIMENSIONS ARE IN MILLIMETER UNLESS OTHERWISE STATED.

THE SWEETESTLAND
AN ENGINEERING FIRM

PROJECT:
MA TAU CHUNG GOVERNMENT PRIMARY SCHOOL, NO.3, OI KING STEER, HUNG HOM, KOWLOON

DRAWING TITLE:
TIMBER FORMWORK FOR 1700x500mm CONCRETE COLUMN

DRAWN BY:	KCY	SCALE:	1:50
CHECKED BY:	YDZ	DATE:	2017-03-09
APPROVED BY:	YDZ		
DRAWING NO.	4393-C3	REV.	3

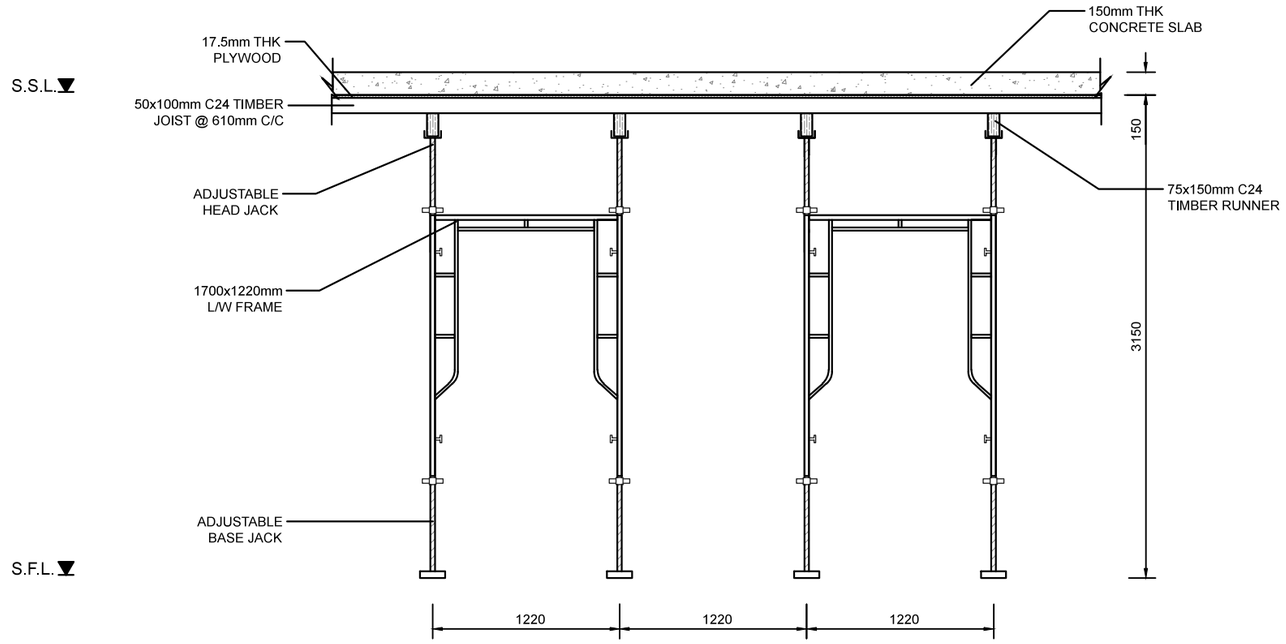

1 / F1 FRONT VIEW
150mm THK SLAB

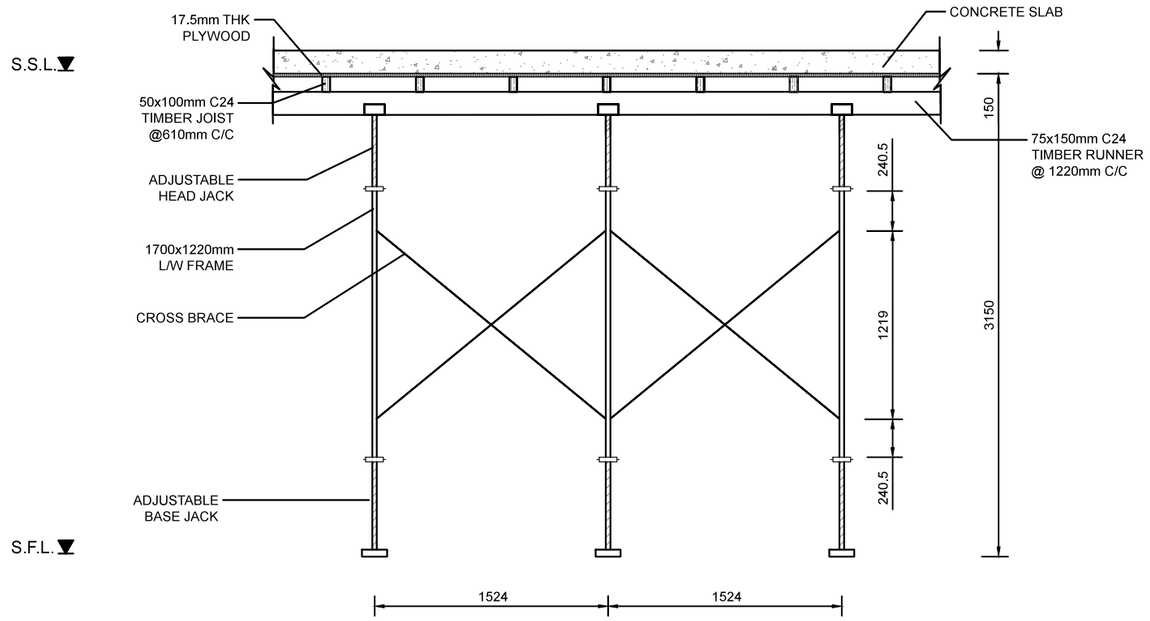

2 / F1 SIDE VIEW
150mm THK SLAB

GENERAL NOTES:

1. THE DESIGN OF SHORING WORKS SHALL COMPLY WITH HONG KONG BUILDING (CONSTRUCTION) REGULATIONS 1990 AND CODE OD PRACTICE FOR THE STRUCTURAL USE OF STEEL 2005.
2. ALL DIMENSIONS ARE IN MILLIMETER UNLESS OTHERWISE STATED.
3. ALL TIMBER SHALL BE SOFTWOOD OF CLASS C24 TO BS4978.
4. ALL TIE RODS SHALL BE MILD STEEL BAR TO C52.
5. ALL STEEL TO BE GRADE 43A MINIMUM TO BS4360.
6. ALL WELD SHALL BE 4mm FILLET WELD TO BS5135.
7. CONCRETE DENSITY TO BE 25KN/m³.
8. AVERAGE CONCRETING RATE TO BE 4.8m³/hr.

NOTES:

1. ALL MEASUREMENT MUST BE CHECKED AT THE SITE — THIS DRAWING IS NOT VALID FOR CONSTRUCTION PURPOSE UNLESS EXPRESSLY CERTIFIED.
2. ALL DIMENSIONS ARE TO BE VERIFIED AND CHECKED ON SITE.
3. USE WRITTEN DIMENSIONS ONLY. DO NOT SCALE THIS DRAWING.
4. THIS DRAWING IS TO BE READ IN CONJECTION WITH ALL RELATED DRAWINGS.
5. UNLESS OTHERWISE INDICATED ALL LEVELS ARE RELATIVE TO HONG KONG PRINCIPAL DATUM.
6. ALL DIMENSIONS ARE IN MILLIMETER UNLESS OTHERWISE STATED.

THE SWEETESTLAND
AN ENGINEERING FIRM

PROJECT:
MA TAU CHUNG GOVERNMENT PRIMARY SCHOOL, NO.3, OI KING STEER, HUNG HOM, KOWLOON

DRAWING TITLE:
STEEL FALSEWORK DESIGN FOR 150mm THK CONCRETE SLAB

DRAWN BY:	KCY	SCALE:	1:40
CHECKED BY:	YDZ	DATE:	2017-03-05
APPROVED BY:	YDZ		
DRAWING NO.	4393-F1	REV.	

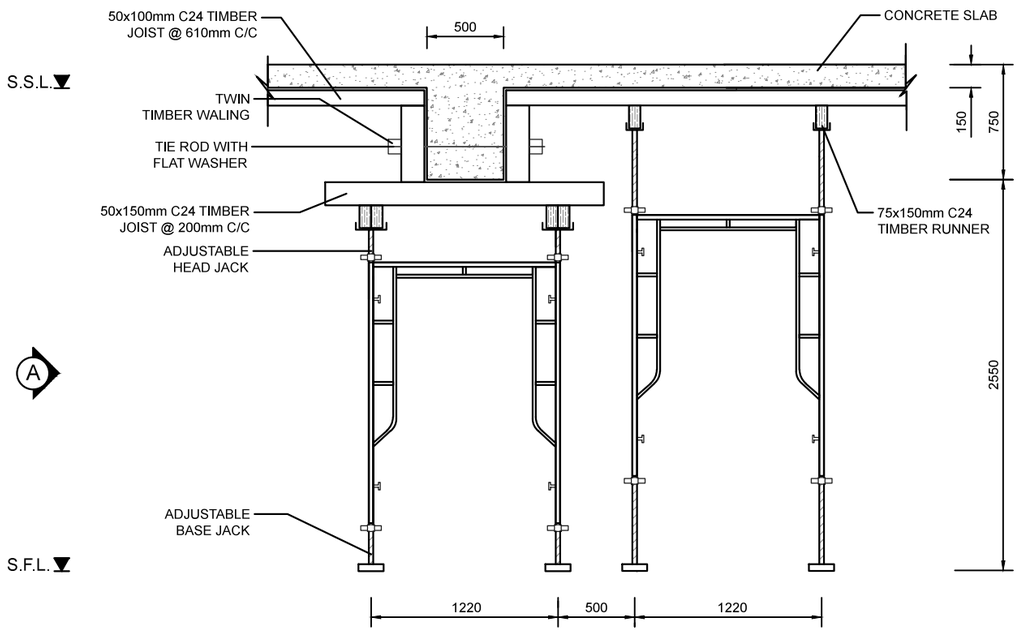

1 / F2 FRONT VIEW
750x500 BEAM

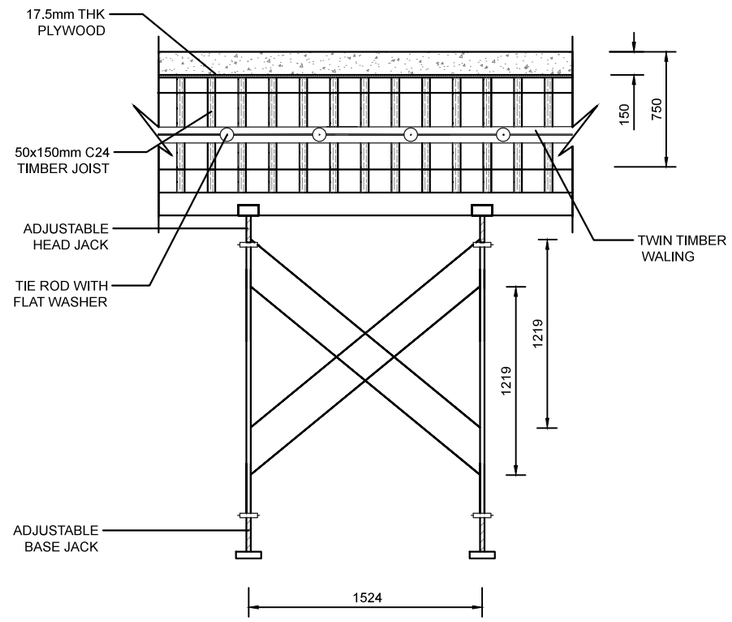

2 / F2 ELEVATION A
750x500mm BEAM

GENERAL NOTES:

1. THE DESIGN OF SHORING WORKS SHALL COMPLY WITH HONG KONG BUILDING (CONSTRUCTION) REGULATIONS 1990 AND CODE OD PRACTICE FOR THE STRUCTURAL USE OF STEEL 2005.
2. ALL DIMENSIONS ARE IN MILLIMETER UNLESS OTHERWISE STATED.
3. ALL TIMBER SHALL BE SOFTWOOD OF CLASS C24 TO BS4978.
4. ALL TIE RODS SHALL BE MILD STEEL BAR TO C52.
5. ALL STEEL TO BE GRADE 43A MINIMUM TO BS4360.
6. ALL WELD SHALL BE 4mm FILLET WELD TO BS5135.
7. CONCRETE DENSITY TO BE 25KN/m³.
8. AVERAGE CONCRETING RATE TO BE 4.8m³/hr.

NOTES:

1. ALL MEASUREMENT MUST BE CHECKED AT THE SITE — THIS DRAWING IS NOT VALID FOR CONSTRUCTION PURPOSE UNLESS EXPRESSLY CERTIFIED.
2. ALL DIMENSIONS ARE TO BE VERIFIED AND CHECKED ON SITE.
3. USE WRITTEN DIMENSIONS ONLY. DO NOT SCALE THIS DRAWING.
4. THIS DRAWING IS TO BE READ IN CONJECTION WITH ALL RELATED DRAWINGS.
5. UNLESS OTHERWISE INDICATED ALL LEVELS ARE RELATIVE TO HONG KONG PRINCIPAL DATUM.
6. ALL DIMENSIONS ARE IN MILLIMETER UNLESS OTHERWISE STATED.

THE SWEETESTLAND
AN ENGINEERING FIRM

PROJECT:
MA TAU CHUNG GOVERNMENT PRIMARY SCHOOL, NO.3, OI KING STEER, HUNG HOM, KOWLOON

DRAWING TITLE:
STEEL FALSEWORK DESIGN FOR 750x500mm CONCRETE BEAM

DRAWN BY:	KCY	SCALE:	1:40
CHECKED BY:	YDZ	DATE:	2017-03-05
APPROVED BY:	YDZ		
DRAWING NO.	4393-F2	REV.	

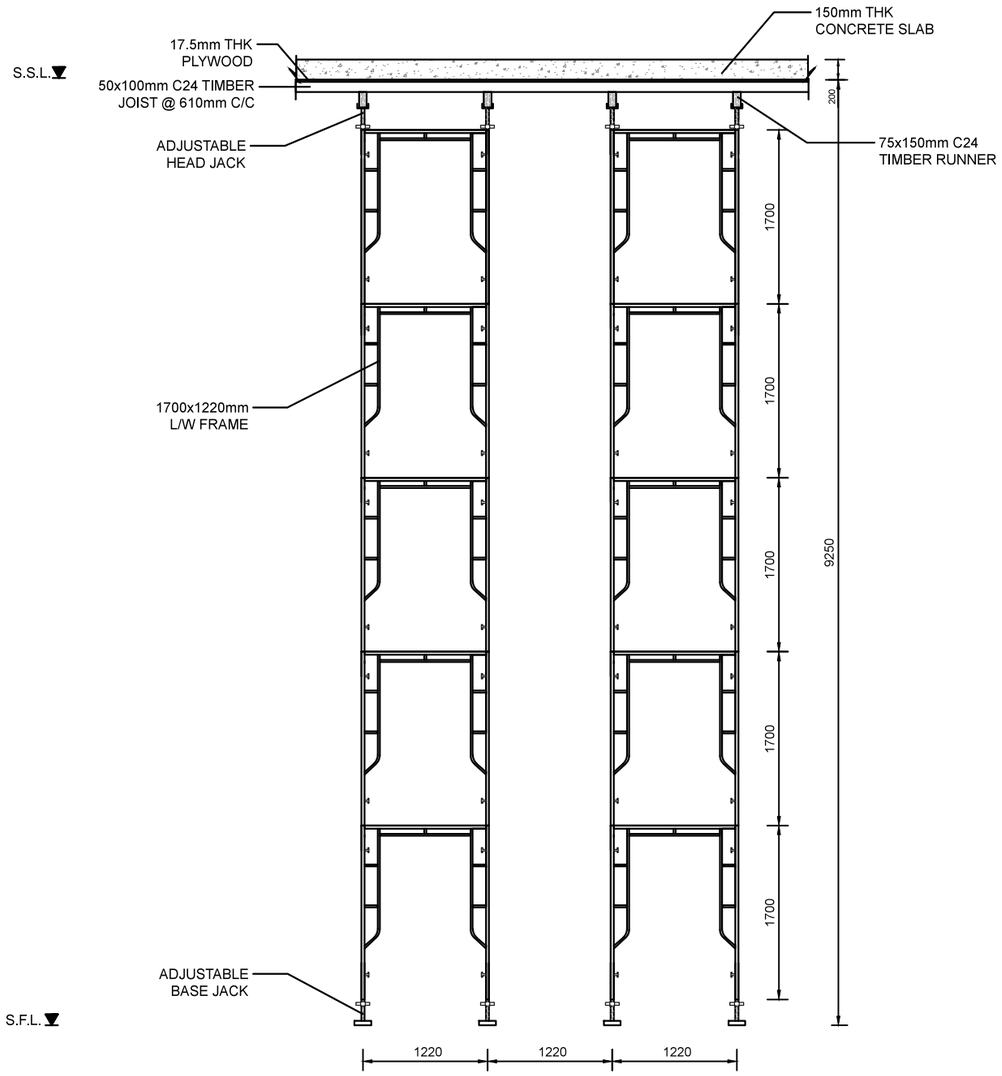

1 F3 FRONT VIEW
200mm THK SLAB

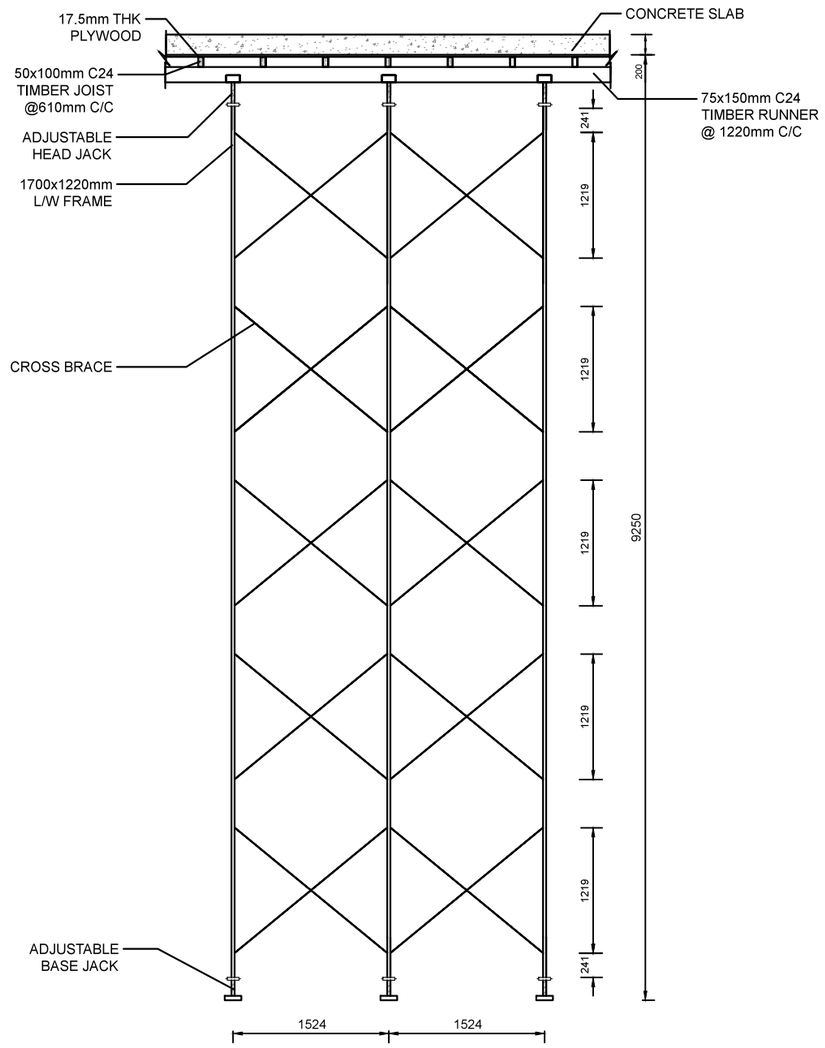

2 F3 SIDE VIEW
200mm THK SLAB

GENERAL NOTES:

1. THE DESIGN OF SHORING WORKS SHALL COMPLY WITH HONG KONG BUILDING (CONSTRUCTION) REGULATIONS 1990 AND CODE OD PRACTICE FOR THE STRUCTURAL USE OF STEEL 2005.
2. ALL DIMENSIONS ARE IN MILLIMETER UNLESS OTHERWISE STATED.
3. ALL TIMBER JOIST SHALL BE SOFTWOOD OF CLASS C16 TO BS4978.
3. ALL TIMBER RUNNER SHALL BE SOFTWOOD OF CLASS C24 TO BS4978.
4. ALL TIE RODS SHALL BE MILD STEEL BAR TO C52.
5. ALL STEEL TO BE GRADE 43A MINIMUM TO BS4360.
6. ALL WELD SHALL BE 4mm FILLET WELD TO BS5135.
7. CONCRETE DENSITY TO BE 25KN/m³.
8. AVERAGE CONCRETING RATE TO BE 4.8m³/hr.

NOTES:

1. ALL MEASUREMENT MUST BE CHECKED AT THE SITE — THIS DRAWING IS NOT VALID FOR CONSTRUCTION PURPOSE UNLESS EXPRESSLY CERTIFIED.
2. ALL DIMENSIONS ARE TO BE VERIFIED AND CHECKED ON SITE.
3. USE WRITTEN DIMENSIONS ONLY. DO NOT SCALE THIS DRAWING.
4. THIS DRAWING IS TO BE READ IN CONJECTION WITH ALL RELATED DRAWINGS.
5. UNLESS OTHERWISE INDICATED ALL LEVELS ARE RELATIVE TO HONG KONG PRINCIPAL DATUM.
6. ALL DIMENSIONS ARE IN MILLIMETER UNLESS OTHERWISE STATED.

THE SWEETESTLAND
AN ENGINEERING FIRM

PROJECT:
MA TAU CHUNG GOVERNMENT PRIMARY SCHOOL, NO.3, OI KING STEER, HUNG HOM, KOWLOON

DRAWING TITLE:
STEEL FALSEWORK DESIGN FOR 200mm THK CONCRETE SLAB

DRAWN BY:	KCY	SCALE:	1:60
CHECKED BY:	YDZ	DATE:	2017-03-05
APPROVED BY:	YDZ		
DRAWING NO.	4393-F3	REV.	

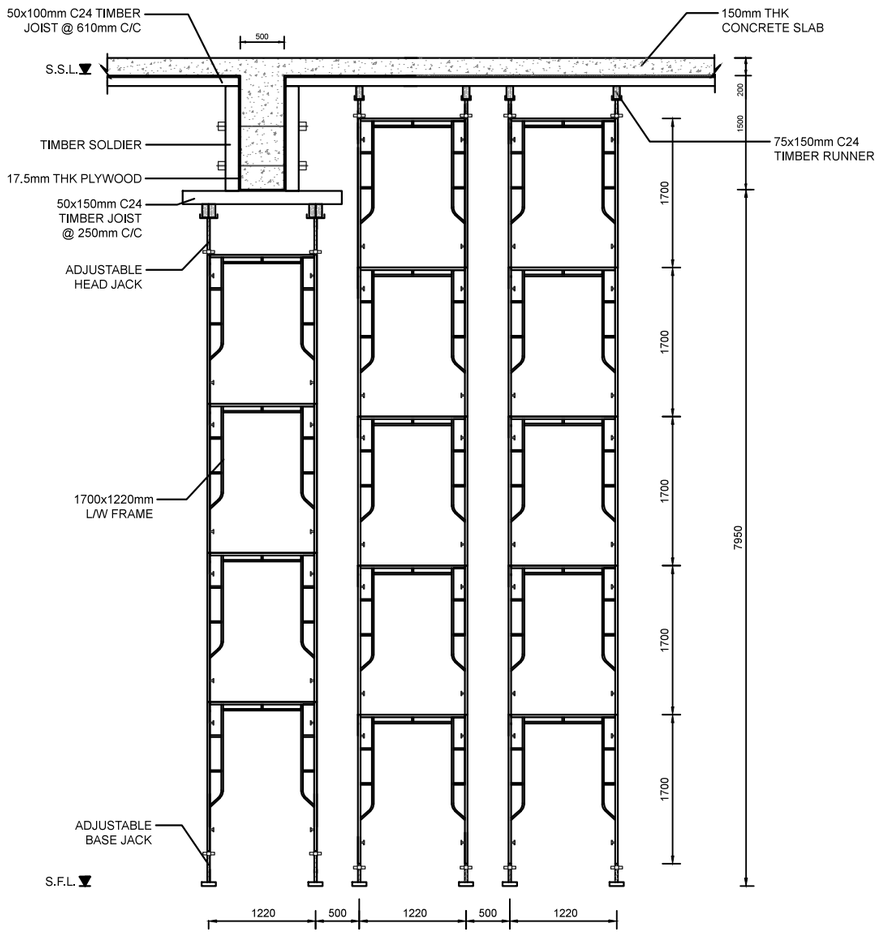

1 / F4 FRONT VIEW
1200x500mm BEAM

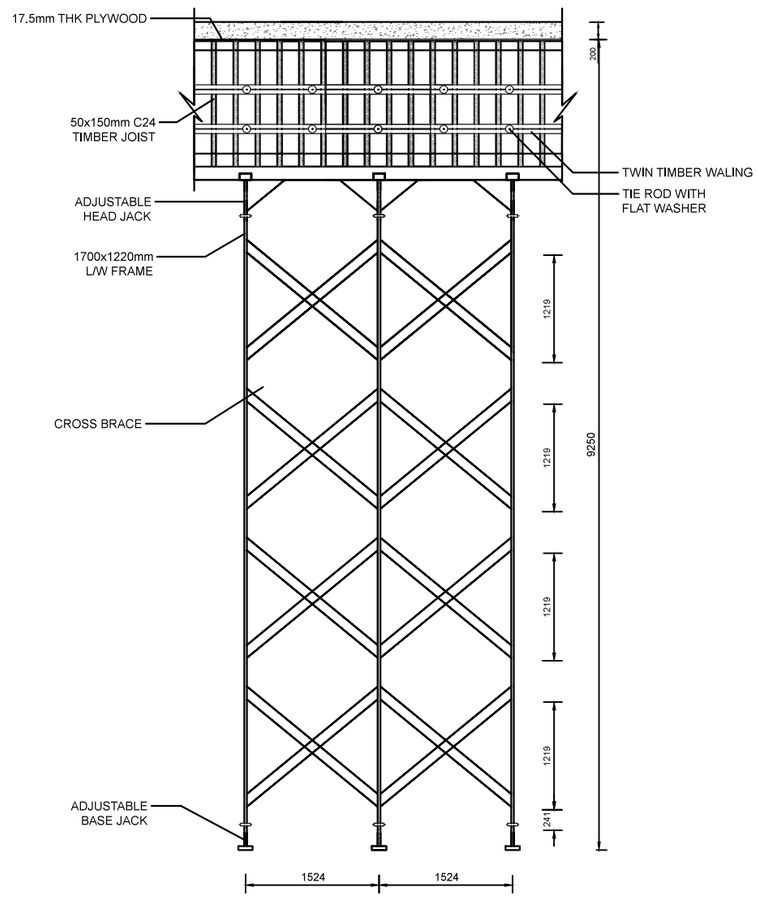

2 / F4 SIDE VIEW
1200x500mm BEAM

GENERAL NOTES:

1. THE DESIGN OF SHORING WORKS SHALL COMPLY WITH HONG KONG BUILDING (CONSTRUCTION) REGULATIONS 1990 AND CODE OD PRACTICE FOR THE STRUCTURAL USE OF STEEL 2005.
2. ALL DIMENSIONS ARE IN MILLIMETER UNLESS OTHERWISE STATED.
3. ALL TIMBER SHALL BE SOFTWOOD OF CLASS C24 TO BS4978.
3. ALL TIE RODS SHALL BE MILD STEEL BAR TO C52.
4. ALL STEEL TO BE GRADE 43A MINIMUM TO BS4360.
5. ALL WELD SHALL BE 4mm FILLET WELD TO BS5135.
6. CONCRETE DENSITY TO BE 25KN/m³.
7. AVERAGE CONCRETING RATE TO BE 4.8m³/hr.

NOTES:

1. ALL MEASUREMENT MUST BE CHECKED AT THE SITE — THIS DRAWING IS NOT VALID FOR CONSTRUCTION PURPOSE UNLESS EXPRESSLY CERTIFIED.
2. ALL DIMENSIONS ARE TO BE VERIFIED AND CHECKED ON SITE.
3. USE WRITTEN DIMENSIONS ONLY. DO NOT SCALE THIS DRAWING.
4. THIS DRAWING IS TO BE READ IN CONJECTION WITH ALL RELATED DRAWINGS.
5. UNLESS OTHERWISE INDICATED ALL LEVELS ARE RELATIVE TO HONG KONG PRINCIPAL DATUM.
6. ALL DIMENSIONS ARE IN MILLIMETER UNLESS OTHERWISE STATED.

THE SWEETESTLAND
AN ENGINEERING FIRM

PROJECT:

MA TAU CHUNG GOVERNMENT PRIMARY SCHOOL, NO.3, OI KING STEER, HUNG HOM, KOWLOON

DRAWING TITLE:

STEEL FALSEWORK DESIGN FOR 1200x500mm CONCRETE BEAM

DRAWN BY:	KCY	SCALE:	1:70
CHECKED BY:	YDZ	DATE:	2017-03-05
APPROVED BY:	YDZ		
DRAWING NO.	4393-F4	REV.	