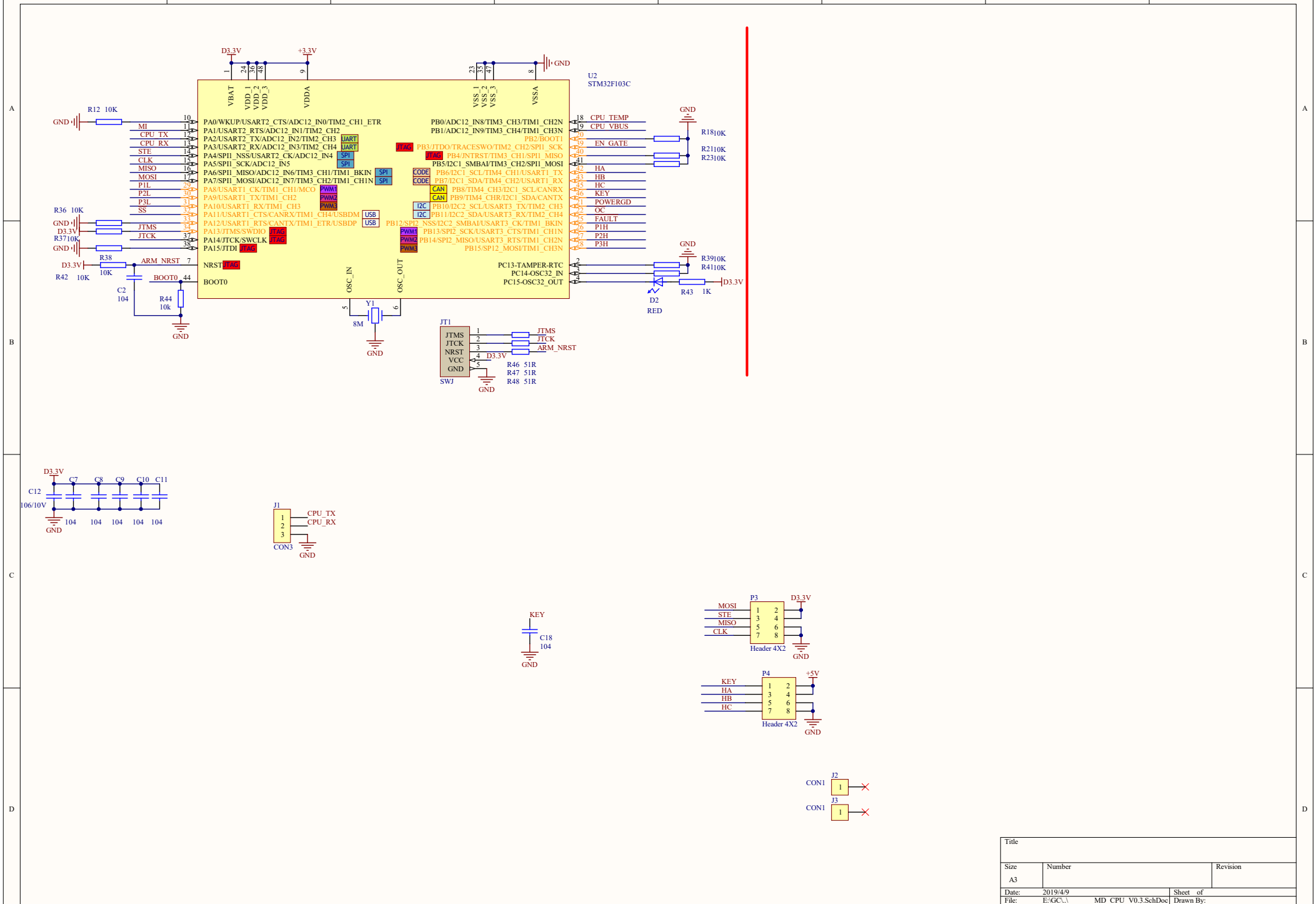
U2
STM32F103C
D3.3V
+3.3V
GND
VBAT
VDD_1
VDD_2
VDD_3
VDDA
VSS_1
VSS_2
VSS_3
VSSA
R12 10K
MI
CPU_TX
CPU_RX
STE
CLK
MISO
MOSI
P1L
P2L
P3L
SS
R36 10K
JTMS
JTCK
R3710K
R38
10K
ARM_NRST
R42 10K
C2
104
BOOT0
R44
10k
PA0/WKUP/USART2_CTS/ADC12_IN0/TIM2_CH1_ETR
PA1/USART2_RTS/ADC12_IN1/TIM2_CH2
PA2/USART2_TX/ADC12_IN2/TIM2_CH3
PA3/USART2_RX/ADC12_IN3/TIM2_CH4
PA4/SPI1_NSS/USART2_CK/ADC12_IN4
PA5/SPI1_SCK/ADC12_IN5
PA6/SPI1_MISO/ADC12_IN6/TIM3_CH1/TIM1_BKIN
PA7/SPI1_MOSI/ADC12_IN7/TIM3_CH2/TIM1_CH1N
PA8/USART1_CK/TIM1_CH1/MCO
PA9/USART1_TX/TIM1_CH2
PA10/USART1_RX/TIM1_CH3
PA11/USART1_CTS/CANRX/TIM1_CH4/USBDM
PA12/USART1_RTS/CANTX/TIM1_ETR/USBDP
PA13/JTMS/SWDIO
PA14/JTCK/SWCLK
PA15/JTDI
NRST
BOOT0
OSC_IN
OSC_OUT
PB0/ADC12_IN8/TIM3_CH3/TIM1_CH2N
PB1/ADC12_IN9/TIM3_CH4/TIM1_CH3N
PB2/BOOT1
PB3/JTDO/TRACESWO/TIM2_CH2/SPI1_SCK
PB4/JNTRST/TIM3_CH1/SPI1_MISO
PB5/I2C1_SMBAI/TIM3_CH2/SPI1_MOSI
PB6/I2C1_SCL/TIM4_CH1/USART1_TX
PB7/I2C1_SDA/TIM4_CH2/USART1_RX
PB8/TIM4_CH3/I2C1_SCL/CANRX
PB9/TIM4_CHR/I2C1_SDA/CANTX
PB10/I2C2_SCL/USART3_TX/TIM2_CH3
PB11/I2C2_SDA/USART3_RX/TIM2_CH4
PB12/SPI2_NSS/I2C2_SMBAI/USART3_CK/TIM1_BKIN
PB13/SPI2_SCK/USART3_CTS/TIM1_CH1N
PB14/SPI2_MISO/USART3_RTS/TIM1_CH2N
PB15/SP12_MOSI/TIM1_CH3N
PC13-TAMPER-RTC
PC14-OSC32_IN
PC15-OSC32_OUT
CPU_TEMP
CPU_VBUS
EN_GATE
HA
HB
HC
KEY
POWERGD
OC
FAULT
P1H
P2H
P3H
R1810K
R2110K
R2310K
R3910K
R4110K
R43 1K
D2
RED
Y1
8M
JT1
JTMS
JTCK
NRST
VCC
GND
SWJ
ARM_NRST
R46 51R
R47 51R
R48 51R
C7
C8
C9
C10
C11
C12
106/10V
104
J1
CPU_TX
CPU_RX
CON3
KEY
C18
P3
MOSI
STE
MISO
CLK
Header 4X2
P4
+5V
HA
HB
HC
CON1
J2
J3
Title
Size
A3
Number
Revision
Date: 2019/4/9
Sheet of
File: E:\GC\..\ MD_CPU_V0.3.SchDoc
Drawn By:

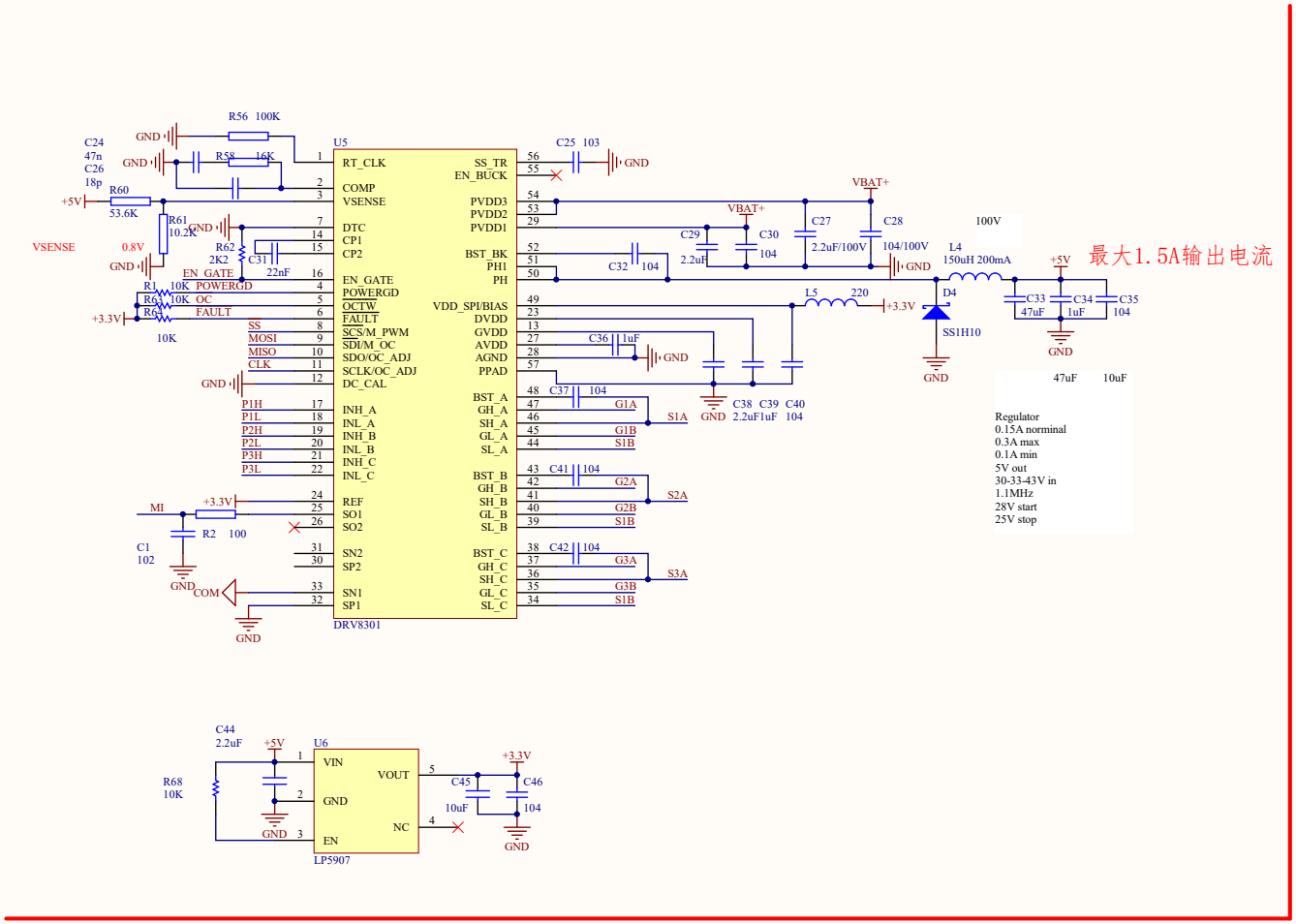

Title		
Size A3	Number	Revision
Date: 2019/4/9		Sheet of
File: E:\GC\..\ MD_V0.3.SchDoc		Drawn By: