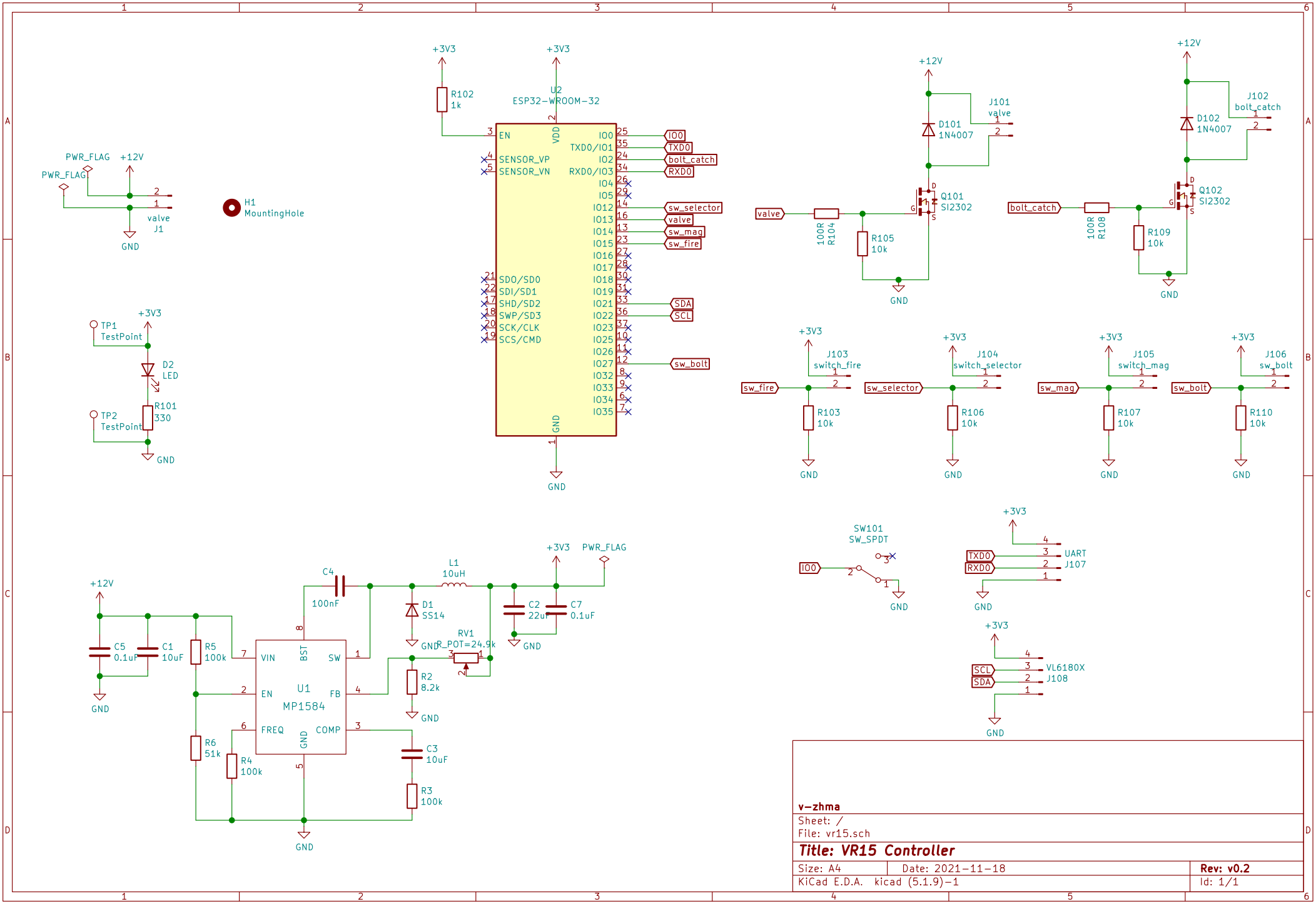

v-zhma

Sheet: /

File: vr15.sch

Title: VR15 Controller

Size: A4	Date: 2021-11-18	Rev: v0.2
KiCad E.D.A. kicad (5.1.9)-1		Id: 1/1