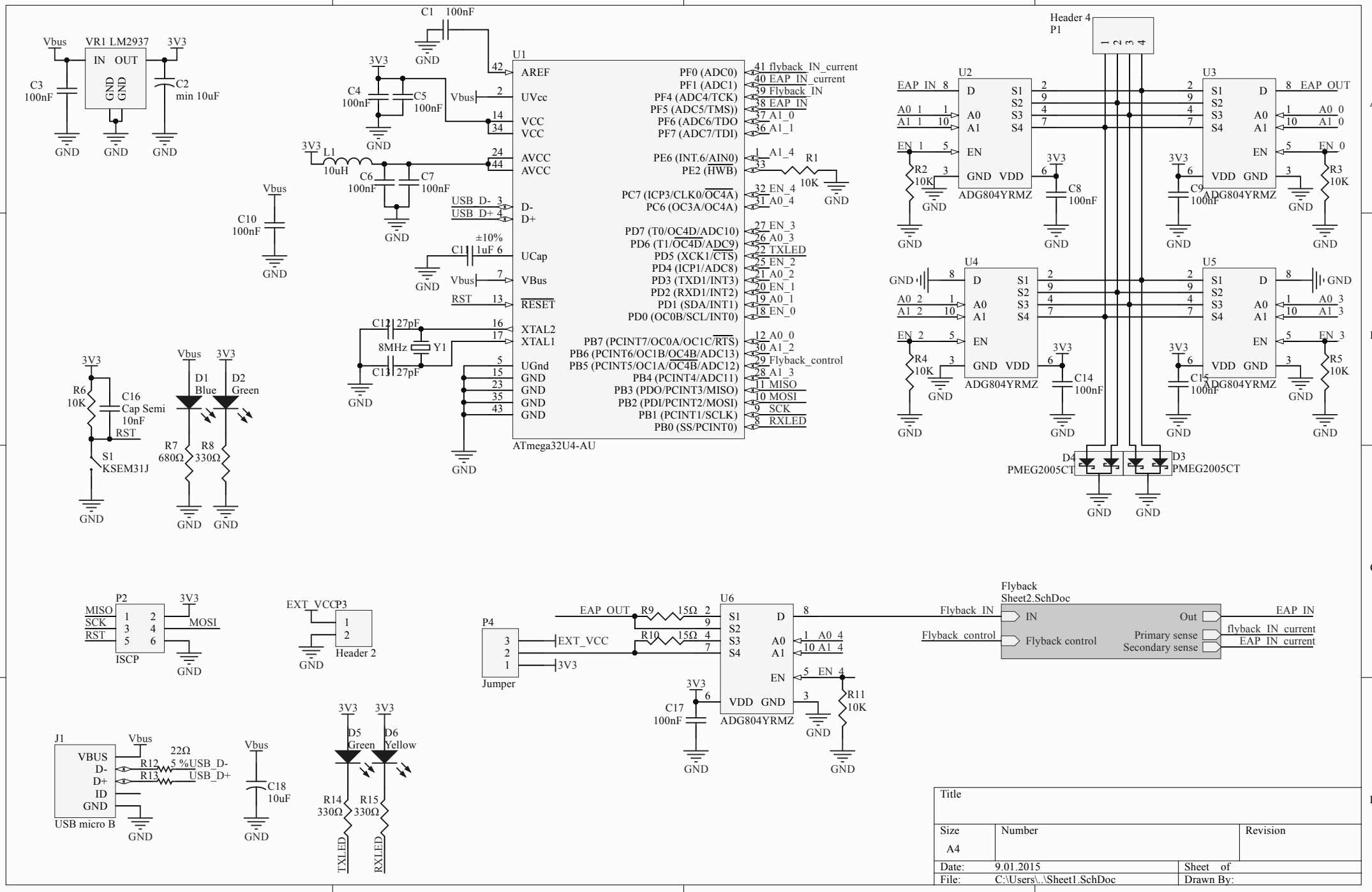
VR1 LM2937
IN OUT
GND GND
Vbus
3V3
C3 100nF
C2 min 10uF
GND
C1 100nF
U1
AREF
UVcc
VCC
VCC
AVCC
AVCC
D-
D+
UCap
VBus
RESET
XTAL2
XTAL1
UGnd
GND
PF0 (ADC0)
PF1 (ADC1)
PF4 (ADC4/TCK)
PF5 (ADC5/TMS))
PF6 (ADC6/TDO
PF7 (ADC7/TDI)
PE6 (INT.6/AIN0)
PE2 (HWB)
PC7 (ICP3/CLK0/OC4A)
PC6 (OC3A/OC4A)
PD7 (T0/OC4D/ADC10)
PD6 (T1/OC4D/ADC9)
PD5 (XCK1/CTS)
PD4 (ICP1/ADC8)
PD3 (TXD1/INT3)
PD2 (RXD1/INT2)
PD1 (SDA/INT1)
PD0 (OC0B/SCL/INT0)
PB7 (PCINT7/OC0A/OC1C/RTS)
PB6 (PCINT6/OC1B/OC4B/ADC13)
PB5 (PCINT5/OC1A/OC4B/ADC12)
PB4 (PCINT4/ADC11)
PB3 (PDO/PCINT3/MISO)
PB2 (PDI/PCINT2/MOSI)
PB1 (PCINT1/SCLK)
PB0 (SS/PCINT0)
ATmega32U4-AU
flyback_IN_current
EAP_IN_current
Flyback_IN
EAP_IN
A1_0
A1_1
A1_4
EN_4
A0_4
EN_3
A0_3
TXLED
EN_2
A0_2
EN_1
A0_1
EN_0
A0_0
A1_2
Flyback_control
A1_3
MISO
MOSI
SCK
RXLED
USB_D-
USB_D+
R1 10K
C4 100nF
C5 100nF
C6 100nF
C7 100nF
L1 10uH
C10 100nF
C11 1uF ±10%
C12 27pF
C13 27pF
8MHz Y1
Header 4
P1
U2
U3
U4
U5
ADG804YRMZ
EAP_IN
EAP_OUT
A0_1
A1_1
EN_1
A0_2
A1_2
EN_2
A0_0
A1_0
EN_0
A0_3
A1_3
EN_3
R2 10K
R3 10K
R4 10K
R5 10K
C8 100nF
C9 100nF
C14 100nF
C15 100nF
D4 PMEG2005CT
D3 PMEG2005CT
R6 10K
C16 Cap Semi 10nF
RST
S1 KSEM31J
D1 Blue
D2 Green
R7 680Ω
R8 330Ω
P2
ISCP
EXT_VCC
P3
Header 2
P4
Jumper
3V3
U6
R9 15Ω
R10 15Ω
C17 100nF
R11 10K
Flyback Sheet2.SchDoc
IN
Flyback control
Out
Primary sense
Secondary sense
flyback_IN_current
EAP_IN_current
J1
USB micro B
VBUS
D-
D+
ID
GND
R12 22Ω 5 %
R13
C18 10uF
D5 Green
D6 Yellow
R14 330Ω
R15 330Ω
Title
Size A4
Number
Revision
Date: 9.01.2015
Sheet of
File: C:\Users\..\Sheet1.SchDoc
Drawn By:

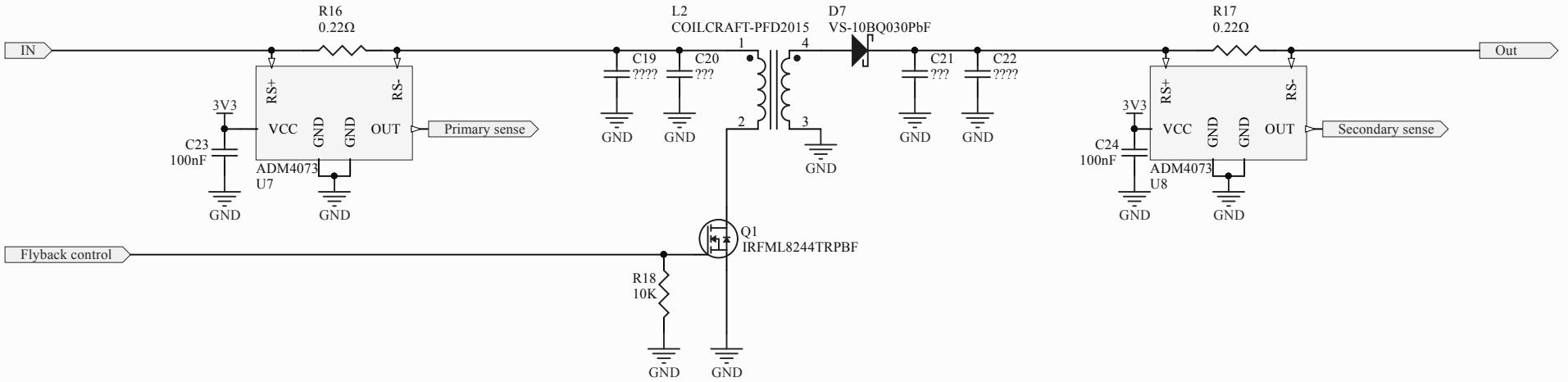

Title		
Size A4	Number	Revision
Date: 9.01.2015		Sheet of
File: C:\Users\..\Sheet2.SchDoc		Drawn By:

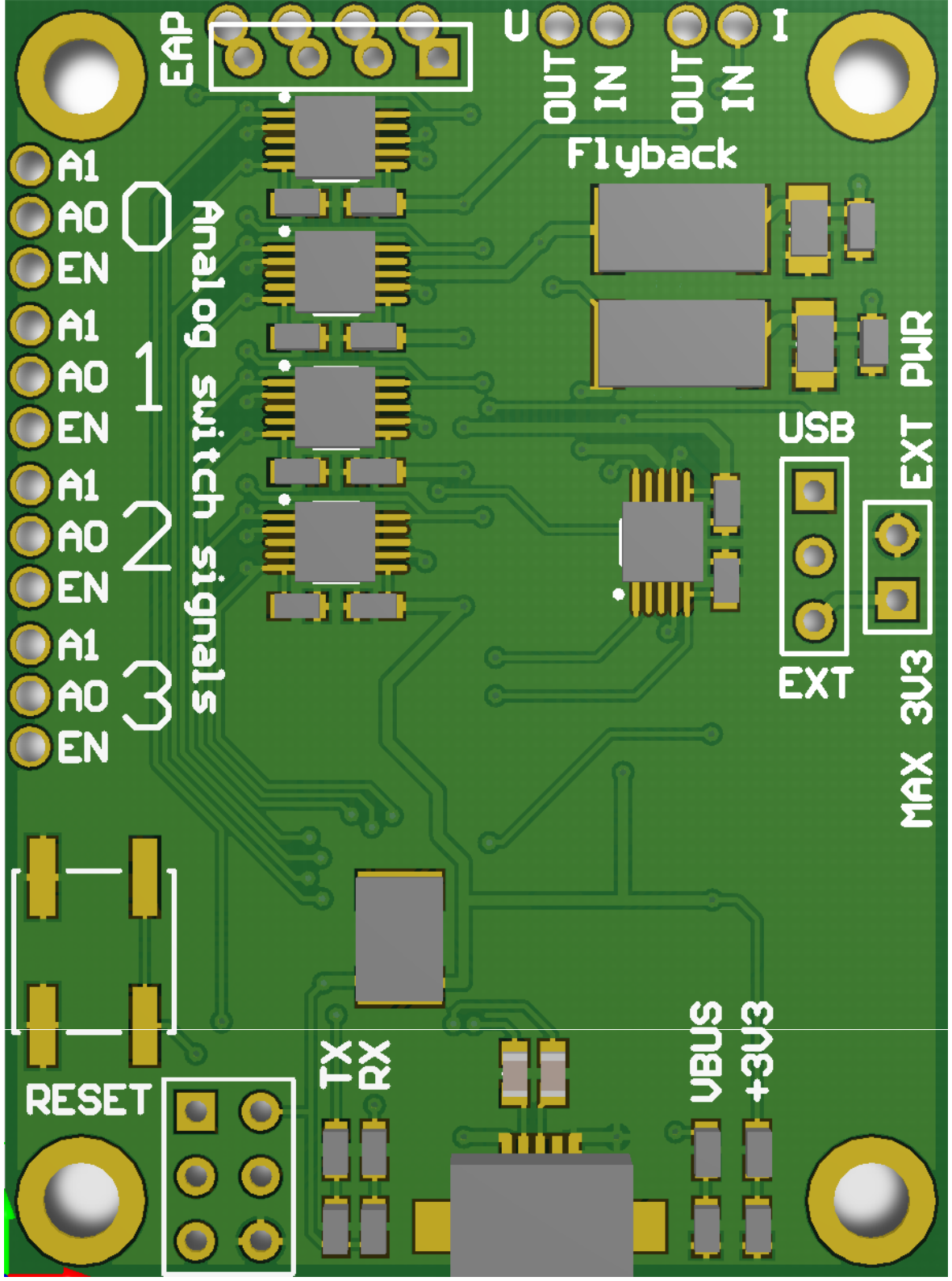
EAP
U
OUT
IN
OUT
IN
I
Flyback
A1
A0
EN
A1
A0
EN
A1
A0
EN
A1
A0
EN
0
1
2
3
Analog switch signals
USB
EXT
EXT
PWR
MAX 3V3
RESET
TX
RX
VBUS
+3V3