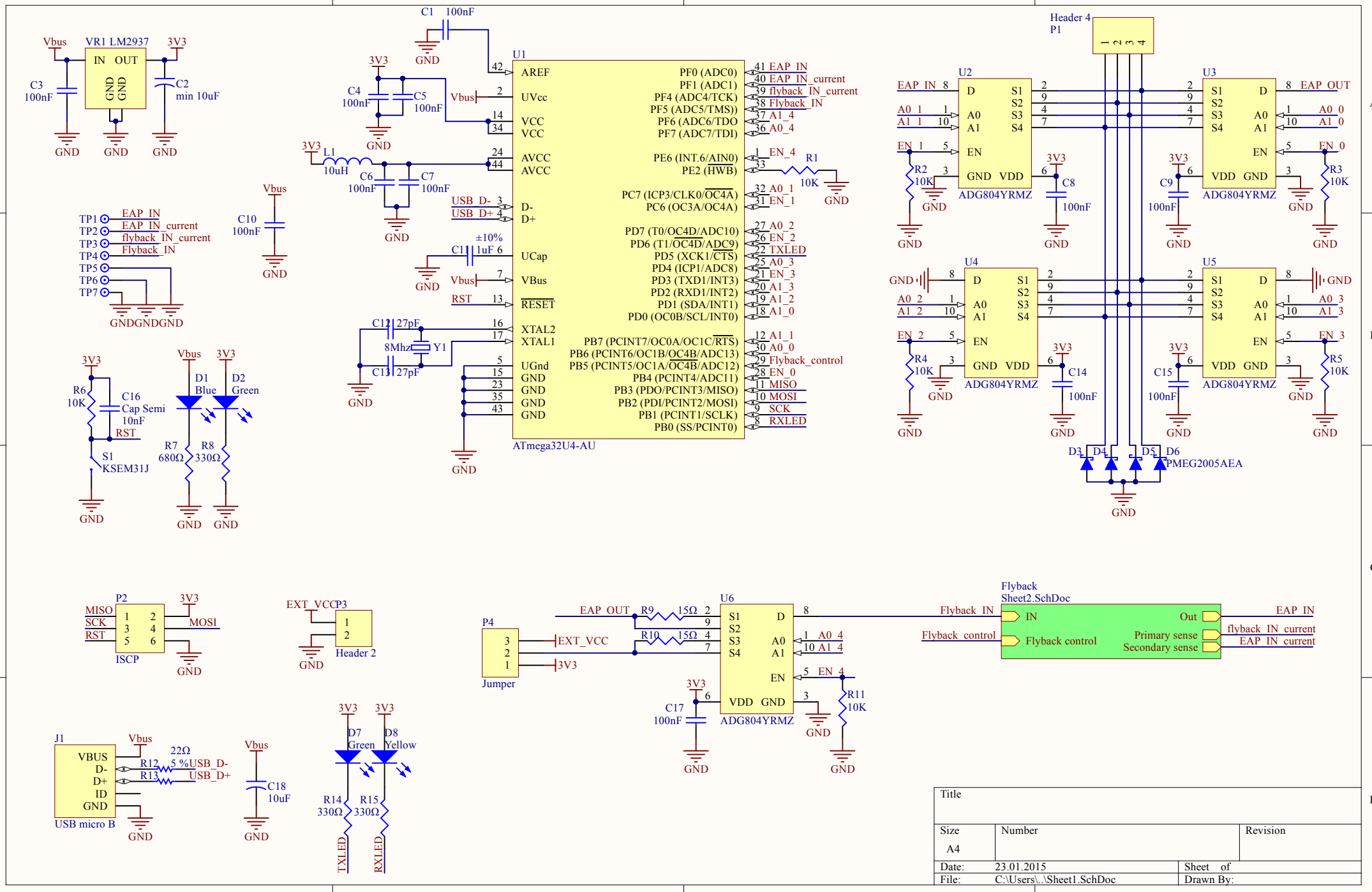
VR1 LM2937
Vbus
3V3
IN OUT
GND GND
C3 100nF
C2 min 10uF
GND
U1
ATmega32U4-AU
AREF
UVcc
VCC
AVCC
D-
D+
UCap
VBus
RESET
XTAL2
XTAL1
UGnd
PF0 (ADC0)
PF1 (ADC1)
PF4 (ADC4/TCK)
PF5 (ADC5/TMS))
PF6 (ADC6/TDO
PF7 (ADC7/TDI)
PE6 (INT.6/AIN0)
PE2 (HWB)
PC7 (ICP3/CLK0/OC4A)
PC6 (OC3A/OC4A)
PD7 (T0/OC4D/ADC10)
PD6 (T1/OC4D/ADC9)
PD5 (XCK1/CTS)
PD4 (ICP1/ADC8)
PD3 (TXD1/INT3)
PD2 (RXD1/INT2)
PD1 (SDA/INT1)
PD0 (OC0B/SCL/INT0)
PB7 (PCINT7/OC0A/OC1C/RTS)
PB6 (PCINT6/OC1B/OC4B/ADC13)
PB5 (PCINT5/OC1A/OC4B/ADC12)
PB4 (PCINT4/ADC11)
PB3 (PDO/PCINT3/MISO)
PB2 (PDI/PCINT2/MOSI)
PB1 (PCINT1/SCLK)
PB0 (SS/PCINT0)
EAP_IN
EAP_IN_current
flyback_IN_current
Flyback_IN
A1_4
A0_4
EN_4
A0_1
EN_1
A0_2
EN_2
TXLED
A0_3
EN_3
A1_3
A1_2
A1_0
A1_1
A0_0
Flyback_control
EN_0
MISO
MOSI
SCK
RXLED
USB_D-
USB_D+
RST
C1 100nF
C4 100nF
C5 100nF
L1 10uH
C6 100nF
C7 100nF
C11 1uF ±10%
C12 27pF
C13 27pF
8Mhz Y1
R1 10K
Header 4
P1
U2
U3
U4
U5
ADG804YRMZ
EAP_OUT
A0_0
A1_0
A0_3
A1_3
EN_3
R2 10K
R3 10K
R4 10K
R5 10K
C8 100nF
C9 100nF
C14 100nF
C15 100nF
D3 D4 D5 D6
PMEG2005AEA
TP1 EAP_IN
TP2 EAP_IN_current
TP3 flyback_IN_current
TP4 Flyback_IN
TP5
TP6
TP7
C10 100nF
R6 10K
C16 Cap Semi 10nF
S1 KSEM31J
D1 Blue
D2 Green
R7 680Ω
R8 330Ω
P2
ISCP
EXT_VCC
P3
Header 2
P4
Jumper
EAP_OUT
R9 15Ω
R10 15Ω
U6
ADG804YRMZ
C17 100nF
R11 10K
Flyback
Sheet2.SchDoc
Flyback_IN
Flyback_control
IN
Flyback control
Out
Primary sense
Secondary sense
EAP_IN
flyback_IN_current
EAP_IN_current
J1
USB micro B
VBUS
D-
D+
ID
GND
R12 22Ω 5 %
R13
C18 10uF
D7 Green
D8 Yellow
R14 330Ω
R15 330Ω
TXLED
RXLED
Title
Size
A4
Number
Revision
Date: 23.01.2015
Sheet of
File: C:\Users\..\Sheet1.SchDoc
Drawn By:

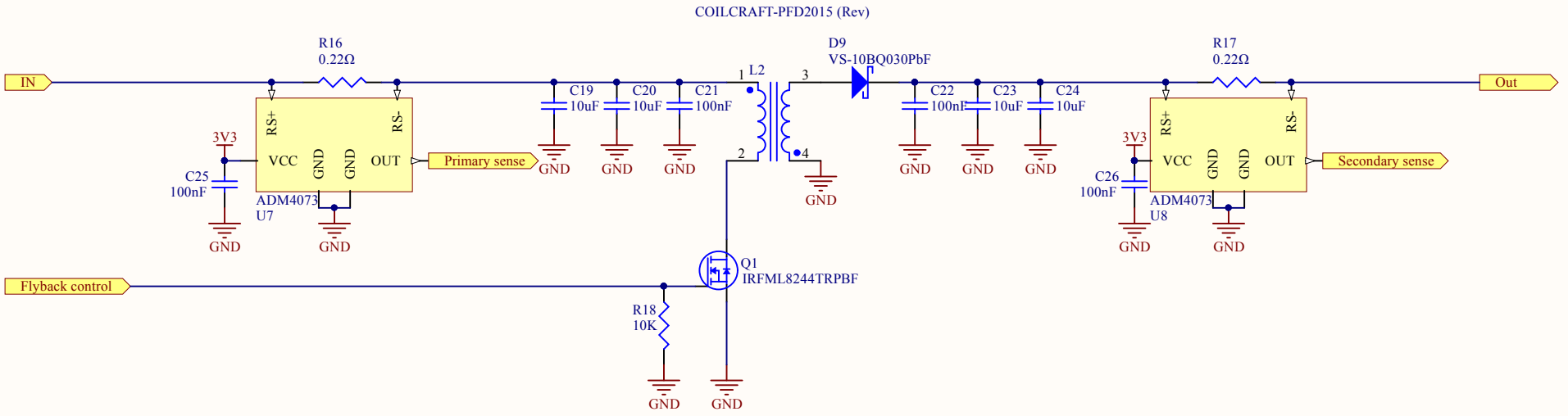

Title		
Size A4	Number	Revision
Date: 23.01.2015		Sheet of
File: C:\Users\..\Sheet2.SchDoc		Drawn By:

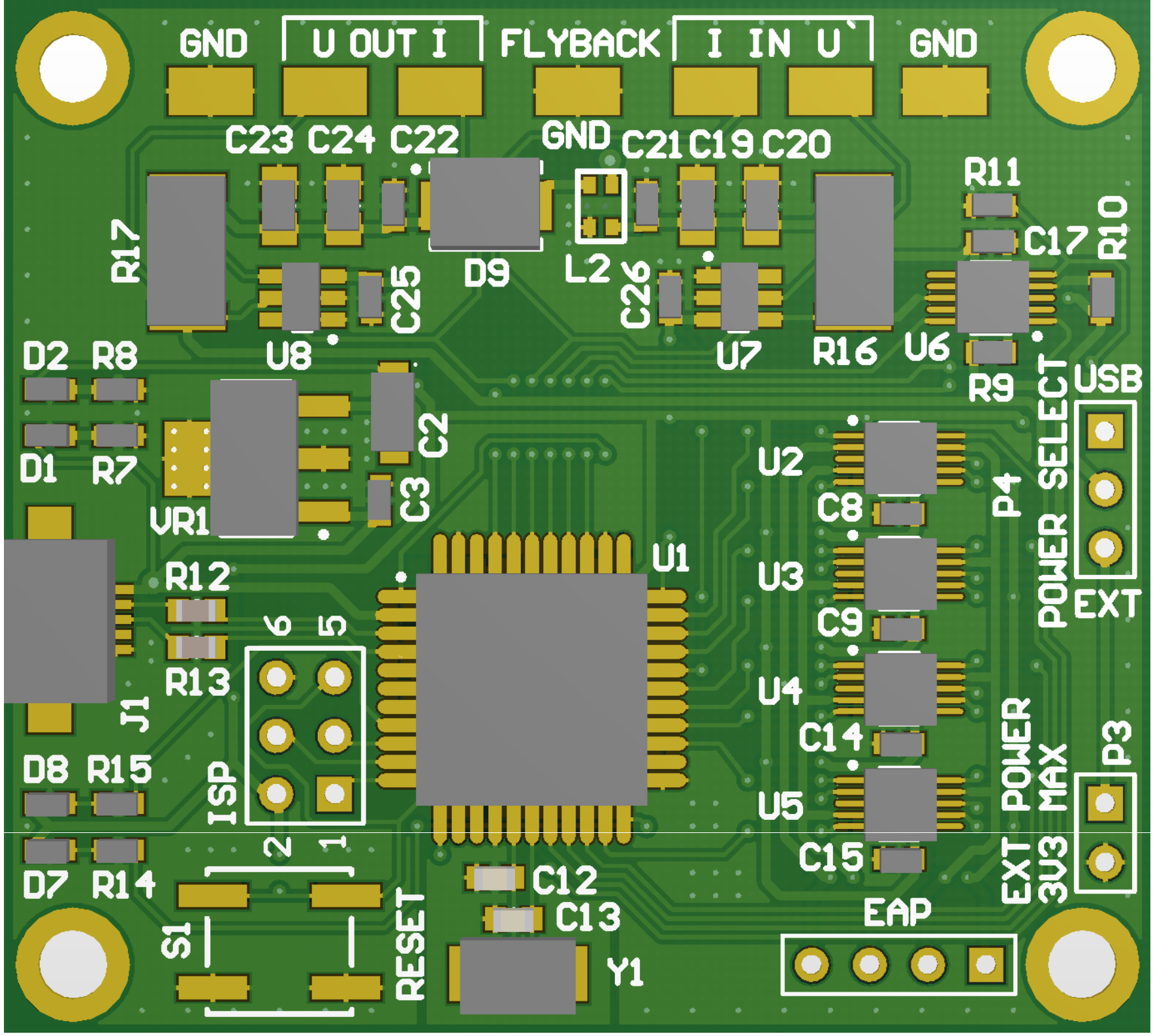
GND
U OUT I
FLYBACK
I IN U
GND
C23 C24 C22
GND
C21 C19 C20
R11
R17
D9
L2
C17
R10
C25
C26
U8
U7
R16
U6
R9
D2 R8
D1 R7
VR1
C2
C3
U2
C8
P4
USB
POWER SELECT
EXT
U1
U3
C9
R12
R13
J1
6 5
ISP
2 1
U4
C14
POWER
MAX
P3
D8 R15
U5
C15
EXT
3V3
D7 R14
S1
RESET
C12
C13
Y1
EAP

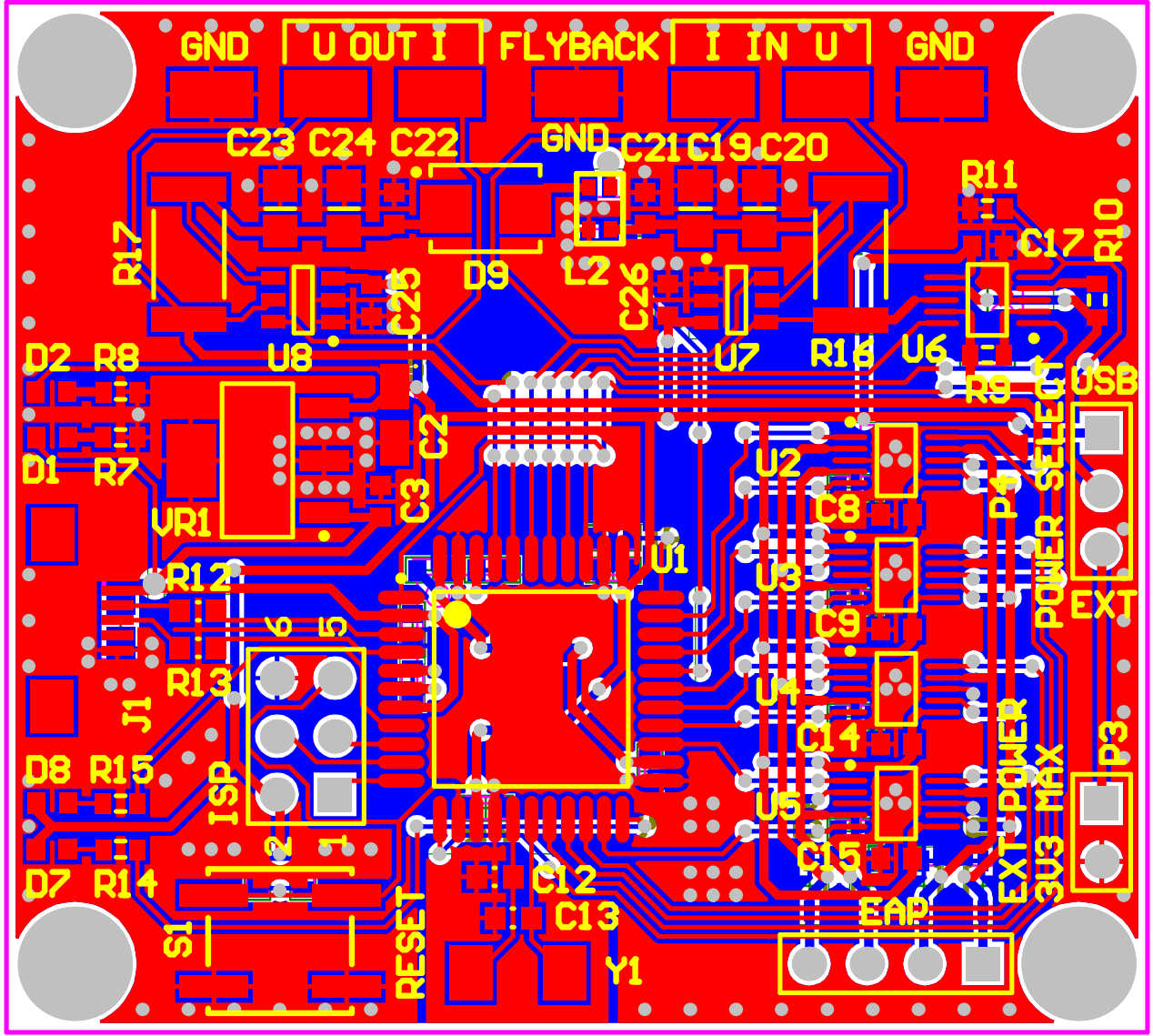
GND
U OUT I
FLYBACK
I IN U
GND
C23 C24 C22
GND C21 C19 C20
R11
R10
C17
R17
D9
L2
C25
C26
D2 R8
U8
U7
R16
U6
R9
USB
D1 R7
C2
C3
U2
C8
P4
POWER SELECT
EXT
VR1
U1
U3
C9
R12
6 5
R13
J1
U4
C14
P3
D8 R15
ISP
U5
EXT POWER
3V3 MAX
C15
D7 R14
C12
C13
EAP
S1
RESET
Y1