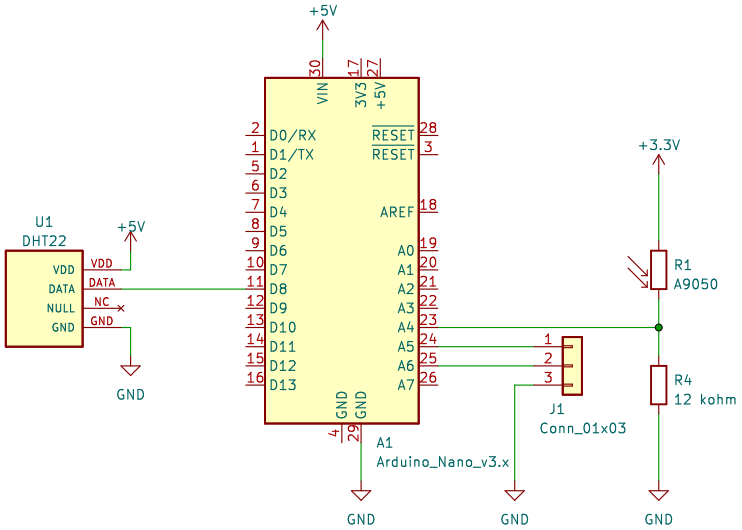

File: mirabilis.kicad_sch			
Title: Mirabilis Sensor Circuit			
Size: A5	Date: 2023-03-25	Author: Z. MASMOUDI	**Rev: REV.01**
KiCad E.D.A. kicad 7.0.1			Id: 1/1