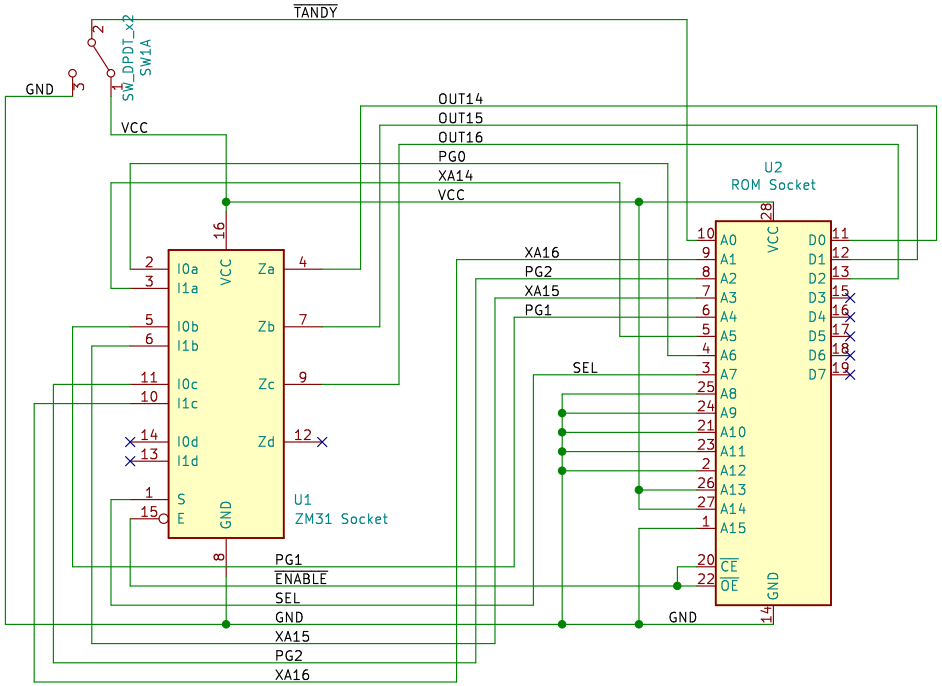

Sheet: /
File: zm31-tandymod-plus-rom-adapter.sch

Title: IBM PCjr TandyMod+ ROM Adapter

Size: USLetter	Date: 2019-10-13	Rev: 1
KiCad E.D.A. kicad (5.1.2)-1		Id: 1/1