Control Switches

EMG Stop

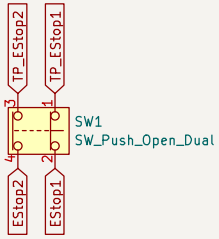

Reset

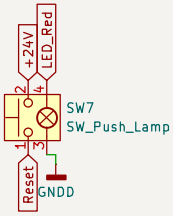

Run

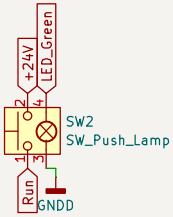

Enable (3 Position SW)

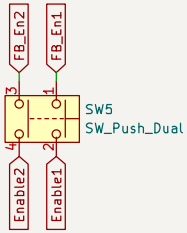

Safety Logic

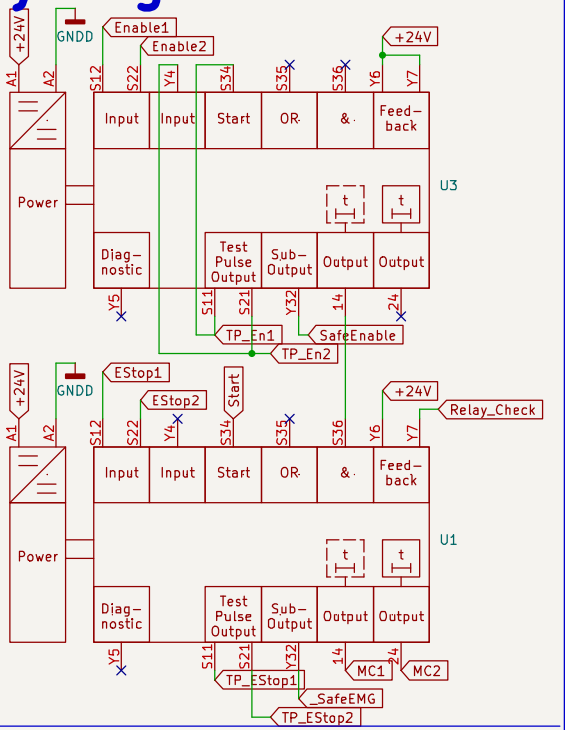

Standard Logic

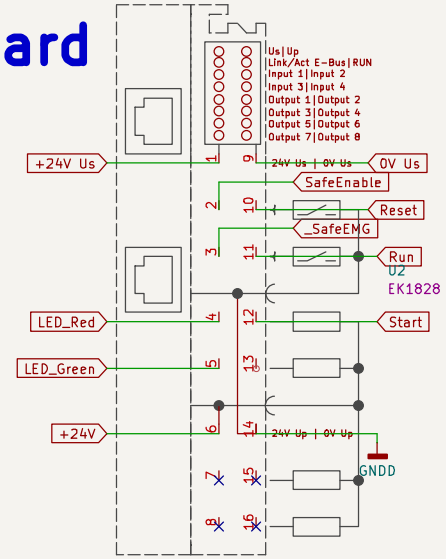

100V Power Supply

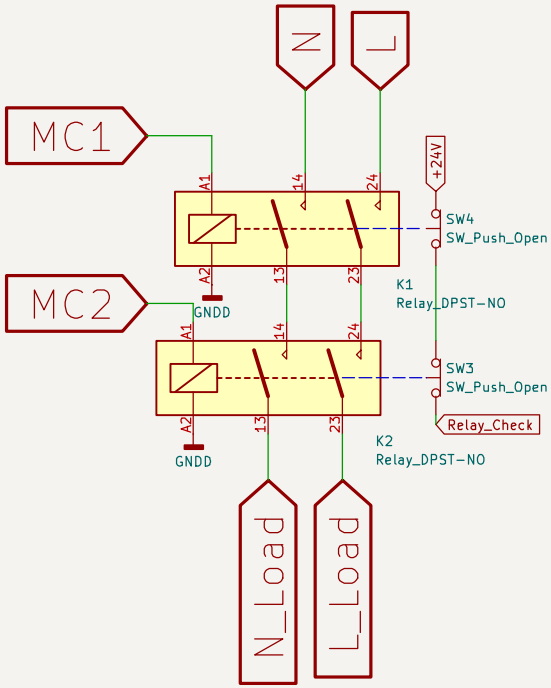

v_.0.0 is updated when I make circuits with this PDF.
v0._.0 is updated when I show this PDF to someone.
v0.0._ is updated when I save this PDF.

Hiroaki Kawase

Sheet: /
File: 01_SafetyEStop.kicad_sch

Title: 13_SafetyPowerSupply

Size: A4	Date: 2024-06-21	**Rev: v1.0.0**
KiCad E.D.A. 8.0.2-1		Id: 1/1