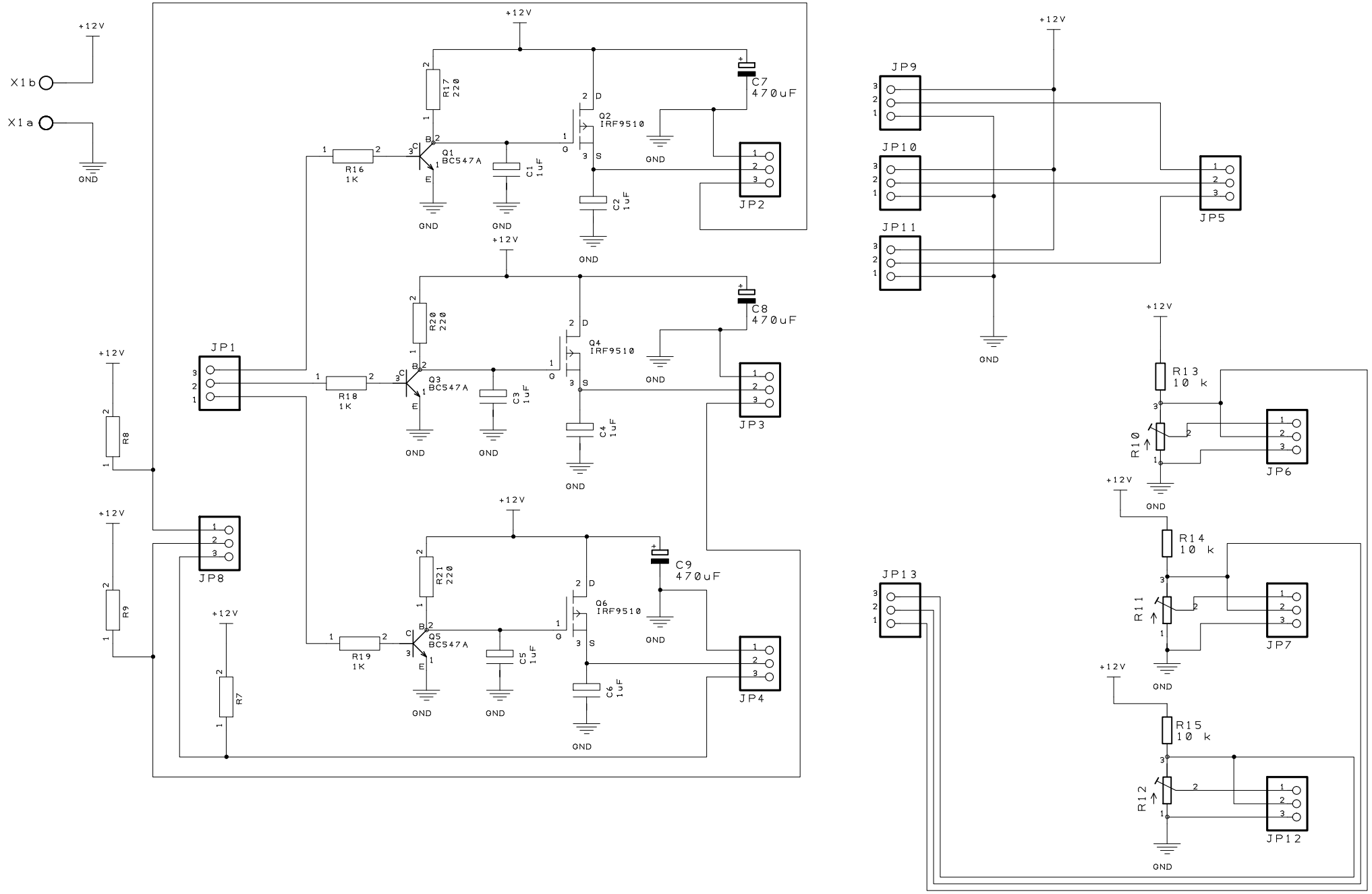

E	D	C	B B. Z.	A	Drawn Bartosz Ziolek	Check Bartosz Ziolek	Projection Do Not Scale		
Drn	Drn	Drn	Drn B. Z.	Project Robothand sensors circuit			Client Politechnika Gdanska		
Chk	Chk	Chk	Chk B. Z.	Title Fans controller			Filename fan_controller.sch	Drawing No. 9	Sheet 1 of 1