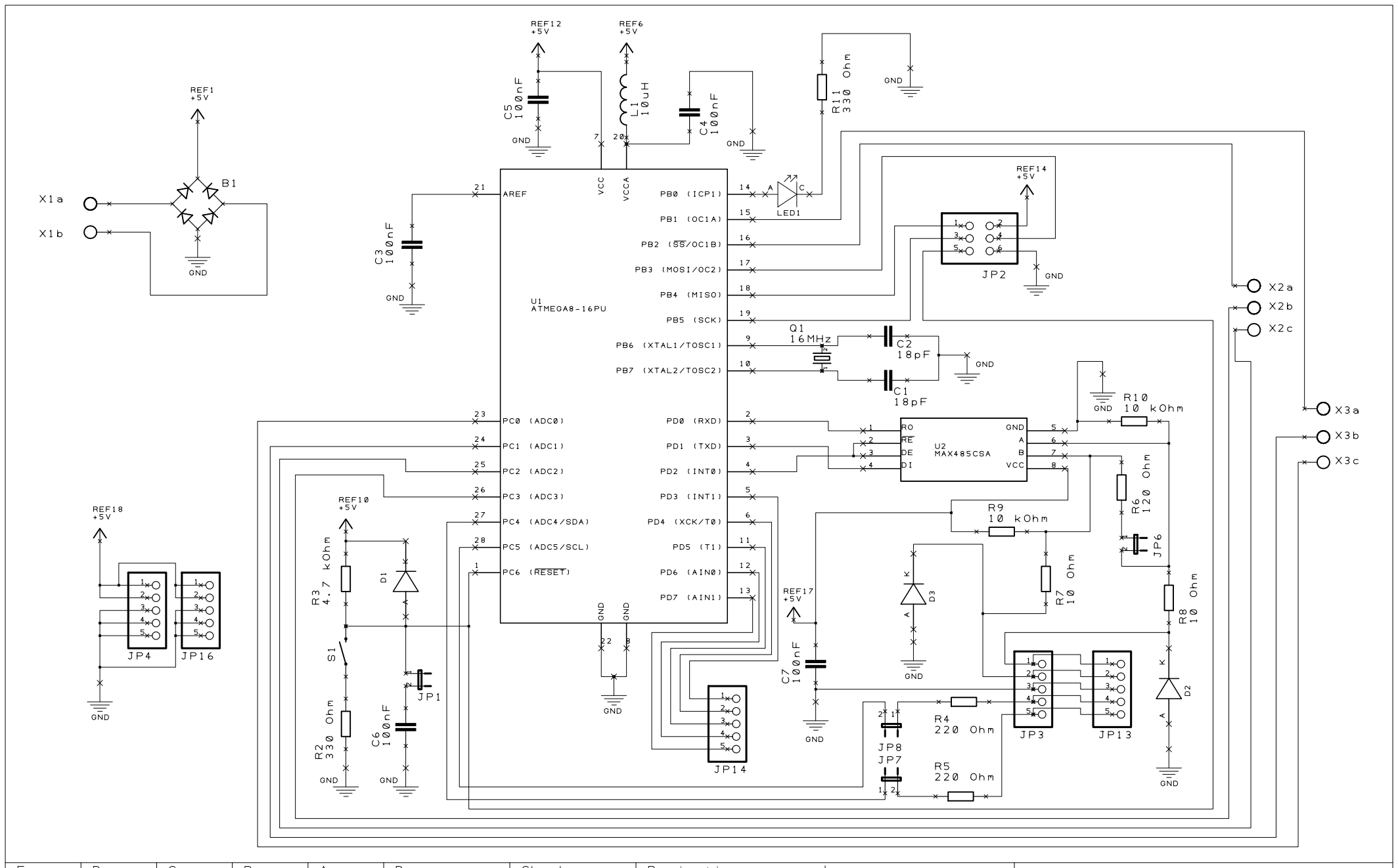

E	D	C	B B. Z.	A	Drawn Bartosz Ziolek	Check Bartosz Ziolek	Projection Do Not Scale		
Drn	Drn	Drn	Drn B. Z.	Project Stepper motor drivers			Client Politechnika Gdanska		
Chk	Chk	Chk	Chk B. Z.	Title Stepper motor translator driver			Filename stepper_motor_translator_driver.sh	Drawing No. 5	Sheet 1 of 1