A Novel Semicircular Arc Piezoelectric Energy Harvesting System With Dual Folded Beams and Its High-Performance Interface Circuit

Jiong Xu, Xinyu Yang, Debo Wang, *Member, IEEE*, and Licheng Deng

***Abstract*—To address the narrow bandwidth and low power density of conventional piezoelectric energy harvesters (PEHs), a novel semicircular arc piezoelectric energy harvesting system with dual folded beams (SAPEH-DFBs) is designed in this work. Distinct from traditional linear structures, the unique semicircular geometry integrated with folded beams enables effective multidirectional energy harvesting and significantly broadens the operating bandwidth through multimode coupling. Furthermore, a modified self-powered parallel synchronized switch interface (SP-PSSHI) is introduced. By integrating the rectifier bridge structure into the switching circuit, this design improves circuit integration and maximizes energy extraction. This circuit is specifically optimized to mitigate the energy cancellation caused by phase differences among the multiple beams. Experimental results demonstrate that the optimal configuration (PEH B) achieves a broad bandwidth of 58 Hz. It delivers a maximum output power of 5.79 mW with a normalized power density (NPD) of 164.8 μW · g^{-2} · mm^{-3}, maintaining high performance across multiple vibration modes. In addition, the proposed interface circuit further enhances the output power by up to approximately 15.8% compared to standard circuits, enabling effective power supply in the wearable devices and microsensors.**

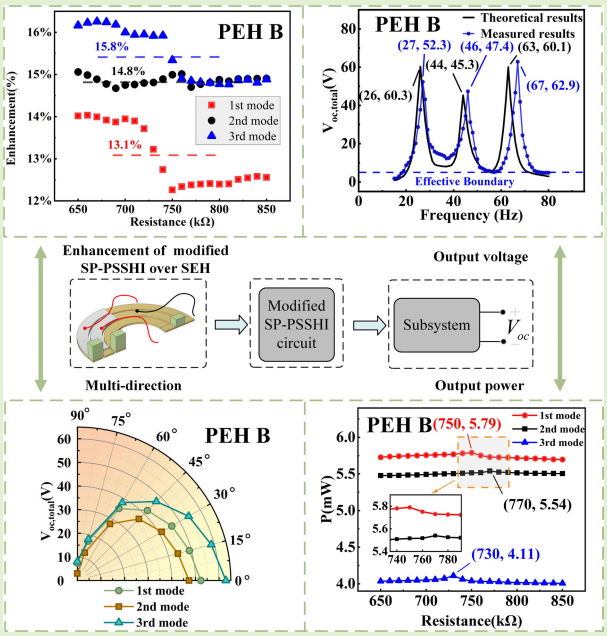

***Index Terms*— Broadband, modified SP-PSSHI circuit, multiple direction, piezoelectric energy harvester (PEH), power density, series connection.**

I. Introduction

CURRENTLY, wireless sensor microsystems are mainly powered by batteries [1]. However, maintaining and replacing these distributed batteries is difficult, and discarded batteries will cause environmental pollution. Therefore, instead of conventional batteries, various renewable energy sources are the general trend to support wireless sensor networks or wearable devices, such as thermal power, solar power, wind power, and vibration energy harvesting [2], [3], [4]. Vibration energy harvesters have been widely studied for the ubiquitous environmental vibration and their all-weather operation capability. The common methods used to convert mechanical energy of vibration into electrical energy are electromagnetic [5], electrostatic [6] and piezoelectric [7] methods, of which the piezoelectric energy harvester (PEH) is simpler in terms of structure and fabrication [8].

Lu et al. [9] innovatively proposed the first PEH with a resonant frequency of 3 kHz and an output power of 15 μW, and this study inspired the research process of PEHs. Typical PEHs include cantilever beams and mass blocks based on single-degree-of-freedom models, which typically operate over a narrow bandwidth. In addition, vibrations such as fluid flow in natural and industrial environments usually produce

Received 18 December 2025; accepted 25 January 2026. Date of publication 4 February 2026; date of current version 16 March 2026. This work was supported in part by the National Natural Science Foundation of China under Grant 61904089, in part by the Province Natural Science Foundation of Jiangsu under Grant BK20190731, in part by China Postdoctoral Science Foundation under Grant 2017M621692, and in part by the Postgraduate Research and Practice Innovation Program of Jiangsu Province under Grant SJCX22_0264. The associate editor coordinating the review of this article and approving it for publication was Prof. Hung Cao. *(Corresponding author: Debo Wang.)*

The authors are with the College of Integrated Circuit Science and Engineering, Nanjing University of Posts and Telecommunications, Nanjing 210023, China (e-mail: wdb@njupt.edu.cn).

Digital Object Identifier 10.1109/JSEN.2026.3658658

1558-1748 © 2026 IEEE. All rights reserved, including rights for text and data mining, and training of artificial intelligence and similar technologies. Personal use is permitted, but republication/redistribution requires IEEE permission.
See https://www.ieee.org/publications/rights/index.html for more information.
Authorized licensed use limited to: Institut Teknologi Sepuluh Nopember. Downloaded on March 14,2026 at 15:22:35 UTC from IEEE Xplore. Restrictions apply.

fluctuations over a range of frequencies. To exploit these specific environmental excitations, specialized harvesting mechanisms have been developed. For instance, Fang et al. [10] used an internal impact mechanism combined with centrifugal softening to target ultralow-frequency rotational machinery, while Huang and Zhong [11] developed a bi-stable harvester to scavenge hydrokinetic energy from flow-induced vibrations. However, the true vibration frequency in the environment usually varies with time over a range of bandwidths [12]. When the actual external vibration frequency deviates far from the resonant frequency, the output performance of conventional PEHs decreases significantly, leading to environmental limitations in practical applications. To solve this problem, researchers have proposed various methods to increase the operating bandwidth of PEHs [13]. The current methods of bandwidth expansion are mainly categorized into nonlinear and linear methods. Nonlinear techniques often employ magnetic or mechanical constraints to broaden the response range. For example, Zhang et al. [14] achieved wideband operation by developing a quad-stable harvester that uses piecewise stiffness and flexible stoppers.

Linear broadening methods are mainly used to broaden the bandwidth by designing multibeam multidegree-of-freedom structures or PEH arrays. Karami and Inman [15] proposed a zigzag structure to achieve a resonant frequency of 50–100 Hz. Its essence is to reduce the resonance frequency by extending the length of the cantilever beam, which can theoretically operate in the low frequency range of 0–25 Hz, but it will lead to excessive structure size. Magdy et al. [16] proposed a two-degree-of-freedom low-frequency PEH structure with resonance frequencies of 3.8 and 5.8 Hz. Tikani et al. [17] designed a spiral-shaped piezoelectric energy harvesting system in order to broaden the frequency band to 15 Hz. However, this system performs poorly in environments with slightly higher frequencies. Xiao et al. [18] proposed a novel piezoelectric energy generator with linear, bi-linear, and impact design configurations. This energy generator uses friction as an excitation to achieve a system resonant frequency close to the frequency of self-excited friction-induced vibration, which generates piezoelectric energy, but the overall power density is low.

In order to solve the narrow bandwidth and low power density of PEHs designed by the linear broadening method, the semicircular arc piezoelectric energy harvesting system with dual folded beam (SAPEH-DFB) is designed in this work. Compared with the conventional 2-DOF linear broadening, the three-beam structure of the SAPEH-DFB realizes three intensive vibration modes in the 0–100 Hz operating frequency band to broaden the operating frequency band and increase the power density more effectively. Meanwhile, the coupling effect between the three modes of SAPEH-DFB will significantly increase the output voltage of each mode, which is conducive to achieving higher power density. By using the torsional vibration characteristics of a semicircular arc beam, the SAPEH-DFB has the ability to harvest energy in multiple directions. In addition, the composite system design with multiple piezoelectric layer subsystems connected in series using a specially designed modified SP-PSSHI circuit as the interface circuit maximizes the use of the mechanical energy generated by the three-beam vibration and avoids the loss of vibration energy of the remaining beams. As a result, the system in this work offers wider bandwidth, higher power density, and more stable output performance.

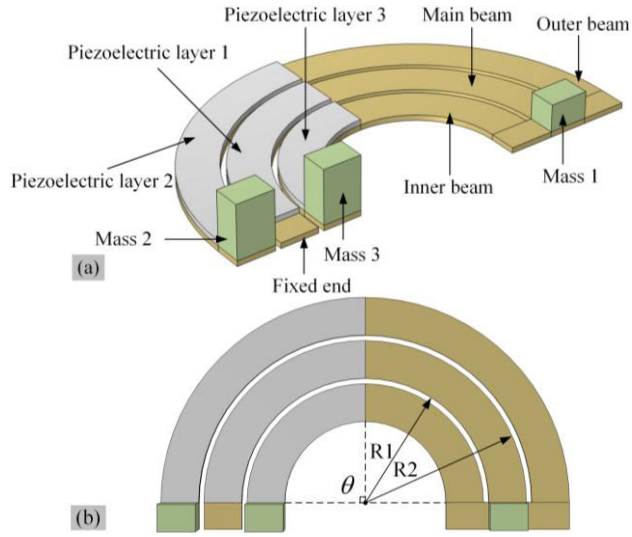

Fig. 1. (a) Structural diagrams of SAPEH-DFB. (b) Top view of SAPEH-DFB.

II. Structure and Principle

The PEH designed in this work is a 3-DOF system, consisting of three semicircular arc cantilever beams, three proof masses, and piezoelectric materials, as shown in Fig. 1(a). The top view of SAPEH-DFB is shown in Fig. 1(b). The main beam is a medium-sized semicircular arc cantilever beam, and the inner and outer two folded beams are connected to the end of the main beam and placed inversely to the main beam, extending to the head of the main beam. Mass 1 is located at the end of the main beam. Masses 2 and 3 are located at the ends of the reverse placed outer and inner beams, respectively.

The SAPEH-DFB incorporates piezoelectric materials in four configurations: single-main-layer, main-plus-inner-layer connected in series, main-plus-outer-layer connected in series, and three-layer connected in series, corresponding to PEH A, PEH B, PEH C, and PEH D, respectively. In the design process, two key factors are considered: energy harvesting efficiency and bandwidth. Simulation results reveal the high output performance of the main beam, thus ensuring the invariance of the piezoelectric layer on the main beam. Traditional rectangular beam structures have limited energy conversion efficiency due to their geometric symmetry, which results in uniform stress distribution under multidirectional excitation. In contrast, semicircular arc structures can generate significant torsional vibrations under excitation from different directions, thereby enhancing energy harvesting capabilities. The design inspiration comes from the research of Cao et al. [19], who demonstrated that dual semicircular arc structures can effectively broaden the operating frequency band and increase power density. The structures of different PEHs are shown in Fig. 2. The structural parameters of each part are detailed in Table I. Copper is selected as the material for the cantilever

Authorized licensed use limited to: Institut Teknologi Sepuluh Nopember. Downloaded on March 14,2026 at 15:22:35 UTC from IEEE Xplore. Restrictions apply.

TABLE I
STRUCTURAL PARAMETERS

	R_1 (mm)	R_2 (mm)	Thickness (mm)	Radian
Outer beam	38	31		
Main beam	30	23	1	π
Inner beam	22	15		
Piezoelectric layer 1	30	23		
Piezoelectric layer 2	38	31	1	$\pi/2$
Piezoelectric layer 3	22	15		
	Length (mm)	Width (mm)	Height (mm)	
Mass 1	7	5	5	
Mass 2	7	5	10	
Mass 3	7	5	10	

TABLE II
MATERIAL PARAMETERS

	Copper	PZT-5H
Density	8900 kg·m^{-3}	7500 kg·m^{-3}
Young's modulus E	119 Gpa	76 Gpa
Piezoelectric constant d_{31}	–	-274 (10^{-12} C/N)
Elastic constant s_{11}	--	16.5 (10^{-12} m^2/N)
Dielectric constant ε_{33}	--	3.01(10^{-8} F/m)

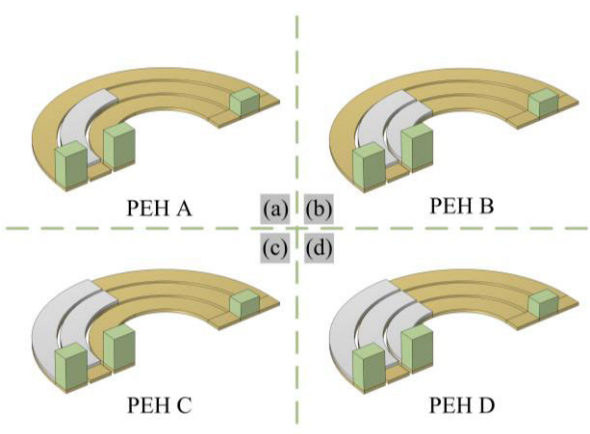

Fig. 2. Structures of different PEHs. (a) PEH A. (b) PEH B. (c) PEH C. (d) PEH D.

beams and proof masses, while PZT-5H is used for the piezoelectric layer, with material parameters shown in Table II. This material combination ensures both mechanical performance of the structure and excellent piezoelectric conversion efficiency.

III. THEORY AND MODEL

A. Resonant Frequency Model

The SAPEH-DFB mainly consists of three semicircular arc cantilever beams connected at their head and tail ends. Therefore, it can be considered equivalent to a 3-DOF lumped parametric model. This model consists of three S-DOF systems, namely the $m_1 - \eta_1 - k_1$ system, the $m_2 - \eta_2 - k_2$ system and the $m_3 - \eta_3 - k_3$ system, as shown in Fig. 3. Here, m_1, m_2, and m_3 are the lumped masses of three subsystems, η_1, η_2, and η_3 are the equivalent damping of three subsystems, and k_1, k_2, and k_3 are the equivalent elasticity coefficients of three subsystems.

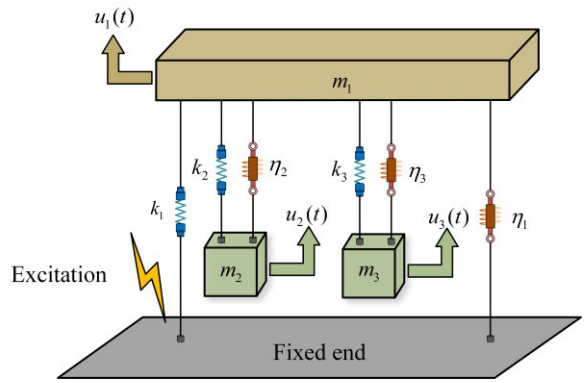

Fig. 3. 3-DOF lumped parametric model.

For a 3-DOF system, the equation of motion control can be expressed as [20]

$$\boldsymbol{M}\ddot{\boldsymbol{u}}(\boldsymbol{t}) + \boldsymbol{\eta}\dot{\boldsymbol{u}}(\boldsymbol{t}) + \boldsymbol{K}\boldsymbol{u}(\boldsymbol{t}) = \boldsymbol{F}(\boldsymbol{t}) \tag{1}$$

where $\boldsymbol{M}$ is the mass matrix, $\boldsymbol{\eta}$ is the damping matrix, $\boldsymbol{K}$ is the stiffness matrix, $\boldsymbol{u}(\boldsymbol{t})$ is the displacement vector, $\dot{\boldsymbol{u}}(\boldsymbol{t})$ is the velocity vector, $\ddot{\boldsymbol{u}}(\boldsymbol{t})$ is the acceleration vector, and $\boldsymbol{F}(\boldsymbol{t})$ is the external excitation vector. The mass matrix, damping matrix, and stiffness matrix are given as follows:

$$\boldsymbol{M} = \begin{pmatrix} m_1 & & \\ & m_2 & \\ & & m_3 \end{pmatrix} \tag{2}$$

$$\boldsymbol{\eta} = \begin{pmatrix} \eta_1 + \eta_2 + \eta_3 & -\eta_2 & -\eta_3 \\ -\eta_2 & \eta_2 & \\ -\eta_3 & & \eta_3 \end{pmatrix} \tag{3}$$

$$\boldsymbol{K} = \begin{pmatrix} k_1 + k_2 + k_3 & -k_2 & -k_3 \\ -k_2 & k_2 & \\ -k_3 & & k_3 \end{pmatrix}. \tag{4}$$

The free vibration equation of the 3-DOF system is obtained by making $\boldsymbol{F}(\boldsymbol{t}) = \boldsymbol{0}$ in (1)

$$\boldsymbol{M}\ddot{\boldsymbol{u}}(\boldsymbol{t}) + \boldsymbol{\eta}\dot{\boldsymbol{u}}(\boldsymbol{t}) + \boldsymbol{K}\boldsymbol{u}(\boldsymbol{t}) = \boldsymbol{0}. \tag{5}$$

For the illustrated 3-DOF system depicted in Fig. 3, in the case of undamped vibration ($\boldsymbol{\eta} = \boldsymbol{0}$), each coordinate in the system moves in simple harmonic motion with varying amplitudes but at the same frequency ω and initial phase angle φ_0. This harmonic motion can be expressed as follows:

$$\boldsymbol{u}(\boldsymbol{t}) = \boldsymbol{\lambda}\sin(\omega t + \varphi_0) \tag{6}$$

where the nonzero column vector $\boldsymbol{\lambda} = (\lambda_1, \lambda_2, \lambda_3)^{\mathbf{T}}$. Substituting (6) into (5) yields the following homogeneous system of equations:

$$\left(\boldsymbol{K} - \omega^2\boldsymbol{M}\right)\boldsymbol{\lambda} = \boldsymbol{0}. \tag{7}$$

Authorized licensed use limited to: Institut Teknologi Sepuluh Nopember. Downloaded on March 14,2026 at 15:22:35 UTC from IEEE Xplore. Restrictions apply.

Since there is a nonzero solution λ to (7), the coefficient determinant is 0

$$\begin{vmatrix} k_1+k_2+k_3-\omega^2 m_1 & -k_2 & -k_3 \\ -k_2 & k_2-\omega^2 m_2 & \\ -k_3 & & k_3-\omega^2 m_3 \end{vmatrix} = 0. \quad (8)$$

The values of the first three characteristic roots ω_1^2, ω_2^2, and ω_3^2 can then be solved from (8). The positive square root of ω_i^2 $(i = 1, 2, 3)$ is known as the ith order resonant frequency of the 3-DOF system, ω_1, ω_2, and ω_3 $(0 < \omega_1 < \omega_2 < \omega_3)$, respectively. The eigenvector λ_i corresponding to ω_i^2 is called the ith mode shape, which can be expressed as $\lambda_i = (\lambda_{i1}, \lambda_{i2}, \lambda_{i3})^{\mathbf{T}}$ $(i = 1, 2, 3)$.

Let $x_i = \omega_i^2 (i = 1, 2, 3)$, the following equation can be obtained from (8):

$$ax^3 + bx^2 + cx + d = 0 \quad (9)$$

where the coefficients for $m_1 = m_2 = m$ are as follows:

$$\begin{cases} a = m_1 m^2 \\ b = -m^2 (k_1 + k_2 + k_3) - m_1 m (k_2 + k_3) \\ c = k_1 m (k_2 + k_3) + k_2 k_3 (m_1 + 2m) \\ d = -k_1 k_2 k_3. \end{cases} \quad (10)$$

By dividing (9) by a and setting $x_i = y_i - (b)/(3a)$, the original equation can be simplified to

$$y^3 + py + q = 0 \quad (11)$$

where the coefficients are

$$p = \frac{3ac - b^2}{3a^2}, \quad q = \frac{2b^3 - 9abc + 27a^2 d}{27a^3}. \quad (12)$$

The three real roots of the equation are

$$y_i = 2\sqrt{-\frac{p}{3}} \cos\left(\frac{\theta + 2(i-1)\pi}{3}\right)$$
$$\theta = \arccos\left(\frac{-q/2}{\sqrt{-(p/3)^3}}\right). \quad (13)$$

Working backwards through the computational logic, an analytical expression for the resonant frequency can be obtained

$$x_i = y_i - \frac{b}{3a}, \quad \omega_i = \sqrt{x_i}, (i = 1, 2, 3). \quad (14)$$

From (9) to (14), the first-order, second-order, and third-order resonant frequencies ω_1, ω_2, and ω_3 of the system are related to the equivalent elastic coefficients k_1, k_2, and k_3 in addition to the lumped masses m_1, m_2, and m_3. For a spiral cantilever beam covered by a piezoelectric layer of a certain radius, the equivalent elastic coefficient can be expressed as follows:

$$k = \frac{3E(\tau h_b + h_p) w}{8\tau^2 \pi^2 r^2} \quad (15)$$

where E is the Young's modulus of the cantilever beam, h_b is the thickness of the cantilever beam, h_p is the thickness of the piezoelectric layer, w is the width of the cantilever beam and piezoelectric layer. $r = (R_1 + R_2)/2$ is the radius of the cantilever beam system, which takes the average value of the inner and outer radii. $\tau = \theta/\pi$ is the correction factor for the helical curvature of the cantilever beam, and θ is the helical curvature of the structure. The modulus of elasticity of the circular cantilever beam can be solved by (10)

$$E = \frac{E_p\left[h_p^3 + 6(\tau h_b)^3 + 3\tau h_b h_p^2\right] + E_b(\tau h_b)^3}{h_p^3 + 6(\tau h_b)^2 + 3\tau h_b h_p^2 + (\tau h_b)^3} \quad (16)$$

where E_p is the Young's modulus of the piezoelectric layer, E_b is the Young's modulus of the cantilever beam. Therefore, the first-order, second-order, and third-order resonant frequencies ω_1, ω_2, and ω_3 of the SAPEH-DFB can be obtained by associating (12)–(16), which are functions of the inner radius R_2 and outer radius R_1.

It is found that the resonant frequency of the SAPEH-DFB can be adjusted by altering the dimensions of its three mass blocks. Taking PEH B as an example, Fig. 4 illustrates the relationship between resonant frequency and the dimensions of the three mass blocks. It is clearly visible that when the dimensions of the three mass blocks change, ω_1, ω_2, and ω_3 also change accordingly, thereby improving the adaptability of PEH B in different environments. Therefore, the resonant frequency of the SAPEH-DFB can be precisely controlled by adjusting the dimensions of the three mass blocks.

B. Equivalent Current Source Model

In addition to the mechanical vibration caused by external vibration, the voltage generated on the surface of the piezoelectric layer also produces a reaction force on the mechanical system, which will affect the mechanical motion of the system to some extent. Therefore, the kinetic equation considering the electromechanical coupling is [21]

$$\boldsymbol{M}\ddot{\boldsymbol{u}}(t) + \boldsymbol{\eta}\dot{\boldsymbol{u}}(t) + \boldsymbol{K}\boldsymbol{u}(t) = \boldsymbol{F}(t) - \boldsymbol{\Theta}\boldsymbol{V}_{\mathbf{out}}(t) \quad (17)$$

$$\Theta = \frac{d_{31}}{\sqrt{s_{11}\varepsilon_{33}}} \quad (18)$$

where Θ is the electromechanical coupling coefficient, d_{31}, s_{11}, and ε_{33} are the piezoelectric, elastic and dielectric constants, respectively [22]. For the PZT-5H material, Θ takes the value of 0.39.

In the piezoelectric energy harvesting system, the PEH without a rectifier interface circuit can be regarded as an ac current source connected in parallel with a capacitor. If the external load R_L is connected directly, the following equation is obtained according to Kirchhoff's current law:

$$\Theta\dot{u}(x) - C_P\dot{V}_{\text{out}} = \frac{V_{\text{out}}}{R_L} = I(t) \quad (19)$$

where $I(t)$ is the equivalent output current, and C_P is the equivalent internal capacitance, which is calculated as follows:

$$C_p = \varepsilon_{33} \cdot \frac{\pi\left(R_1^2 - R_2^2\right)}{4h_p}. \quad (20)$$

C. Modified SP-PSSHI Circuit Model

The piezoelectric subsystems involved in the composite piezoelectric system are connected in series. To avoid the

Authorized licensed use limited to: Institut Teknologi Sepuluh Nopember. Downloaded on March 14,2026 at 15:22:35 UTC from IEEE Xplore. Restrictions apply.

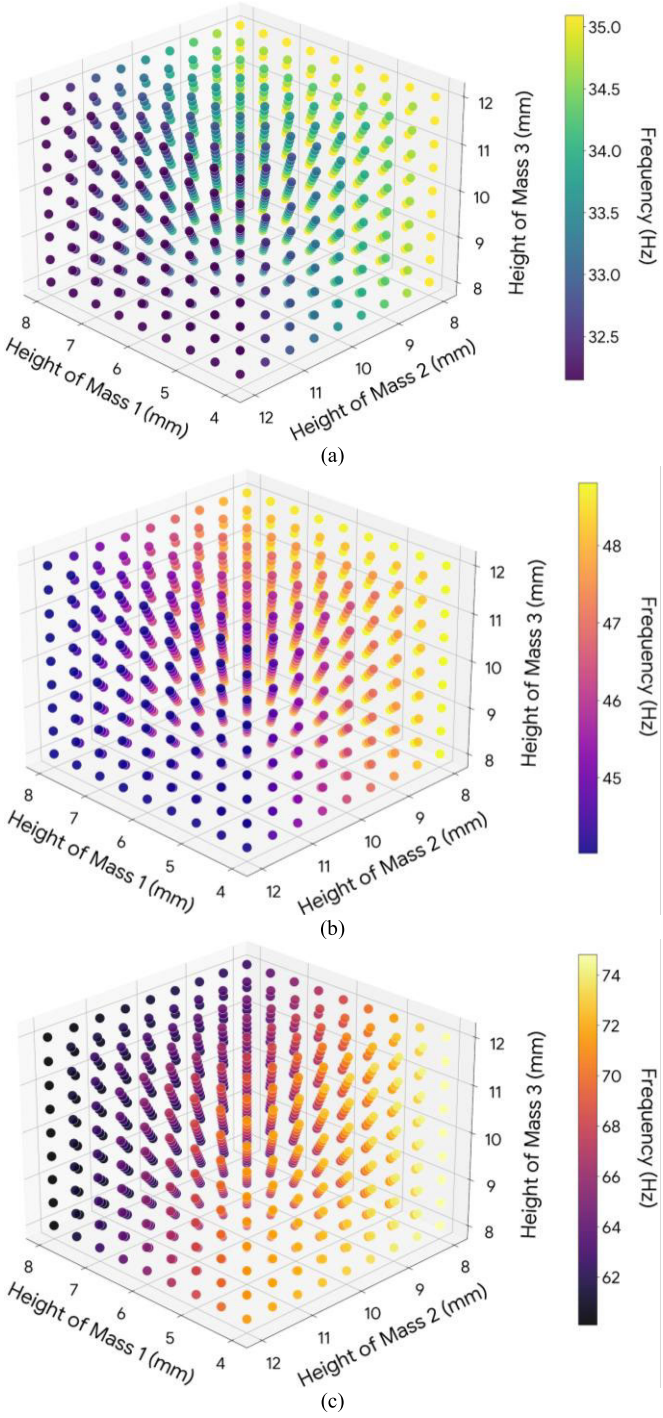

Fig. 4. Relationship of resonant frequencies with three mass blocks. (a) First-order resonant frequency. (b) Second-order resonant frequency. (c) Third-order resonant frequency.

problem of voltage drop due to phase difference, a rectifier circuit is required to convert the ac output to dc output in this work. In order to allow the energy generated by the energy harvester to be fully harvested and used for back-end loads, the improved SP-SSHI circuitry [23], [24] is innovatively used in this system instead of the traditional standard energy harvesting (SEH) interface circuitry to more efficiently convert the output ac power to dc power, as shown in Fig. 5. In order to adapt the circuit to the piezoelectric structure, a series

TABLE III
COMPONENT MODELS OR VALUES

Component	Model / value
Resistance (R_1 and R_2)	200 kΩ
Capacitance (C_1 and C_2)	680 pF
Diodes (D_1 to D_8)	1N4004
PNP transistors (T_1 and T_4)	TIP32C
NPN transistors (T_2 and T_3)	TIP31C
C_{rect}	47 μF
L_i	47 mH
r	200 Ω

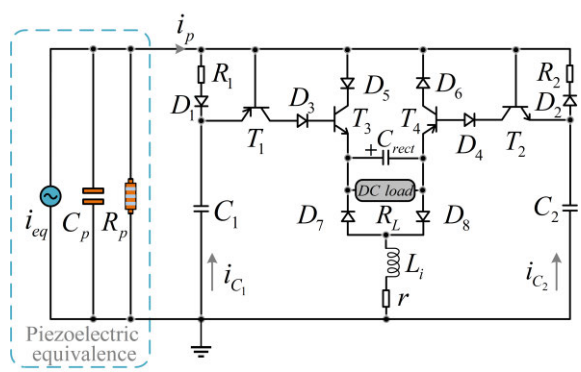

Fig. 5. Modified SP-PSSHI circuit for SAPEH-DFB.

of trial and error experiments are carried out through circuit simulation, and the component values and models used in the simulation are obtained are listed in Table III.

In this interface circuit, resistors R_1 and R_2 are equal and are referred to as R_{ed}; capacitors C_1 and C_2 are equal and are referred to as C_{ed}. In order to realize the circuit ON-state transition of the complementary topology circuit structure, the values of C_{ed} and R_{ed} should satisfy the following criterion:

$$2\pi\sqrt{L_i C_p} < R_{\text{ed}} C_{\text{ed}} \ll \frac{\pi}{\omega} \tag{21}$$

where ω is the frequency of the mechanical vibration. To avoid misclassification of local minima or maxima, the first half of the inequality ensures that the time required for charge neutralization is later than the time between two voltage inversions; the second half of the inequality emphasizes that the time required for charge neutralization is much less than half a vibrational period to reduce the effect of insertion of the envelope detector.

The effect of the two capacitors C_1 and C_2 is ignored in the envelope detector in the interface circuit [25]. C_1 and C_2 are simply two media through which energy flows. During a vibration cycle, the energy flowing into these two capacitors is returned to the mechanical part of the piezoelectric collection, rather than being stored in themselves or used to power a dc load. Thus, C_1 and C_2 can be equivalently considered as two capacitors connected in parallel to C_p.

Authorized licensed use limited to: Institut Teknologi Sepuluh Nopember. Downloaded on March 14,2026 at 15:22:35 UTC from IEEE Xplore. Restrictions apply.

In order to distinguish from the above modeling analysis, a new expression for the displacement excitation of the simple harmonic vibration is given

$$x(t) = X \sin(\omega t) \tag{22}$$

where X is the amplitude of the simple harmonic vibration displacement excitation. For the given excitation, the expression for the equivalent current source should be

$$i_{\text{eq}}(t) = \Theta X \omega \cos(\omega t). \tag{23}$$

Referring to the equivalent current source with load model coupled to the SP-SSHI interface circuit, the equation for the open-circuit voltage across the piezoelectric sheet can be obtained as

$$v_{\text{oc}}(t) = V_{\text{oc}} \sin(\omega t + \theta) \tag{24}$$

where V_{oc} is the open-circuit voltage of the piezoelectric energy harvesting system; θ is the phase difference between the positive peak of V_{oc} and the over-zero point (from positive to negative) of i_{eq}. These two variables satisfy the following equations:

$$V_{\text{oc}} = \frac{\Theta X \omega R_p}{\sqrt{1 + \omega^2 R_p^2 \left(C_p + 2C_{\text{ed}}\right)^2}} \tag{25}$$

$$\theta = \tan^{-1}\left[\frac{1}{\omega R_p \left(C_p + 2C_{\text{ed}}\right)}\right]. \tag{26}$$

To analyze the effect of the modified SP-PSSHI circuit on the open-circuit voltage at the output of the PEH, the original open-circuit voltage of the piezoelectric structure, without the switching circuit connected, is

$$V_{\text{oc,org}} = \frac{\Theta X \omega R_p}{\sqrt{1 + \omega^2 R_p^2 C_p^2}}. \tag{27}$$

According to (22) and (24), it is easy to see that the access of SP-PSSHI will somewhat reduce the output open-circuit voltage for the same excitation.

For a purely resistive load network with a resistance value of R_L, the output power is

$$P = \frac{v_{\text{oc}}^2}{R_L} = \frac{\Theta^2 X^2 \omega^2 R_p^2}{1 + \omega^2 R_p^2 \left(C_p + 2C_{\text{ed}}\right)^2} \sin^2\left(\omega t + \tan^{-1}\left[\frac{1}{\omega R_p \left(C_p + 2C_{\text{ed}}\right)}\right]\right). \tag{28}$$

The vibration states of different cantilever beams under different vibration frequencies vary greatly, and the series or parallel connection after the layout of multiple piezoelectric sheets is difficult for this system to provide a stable load carrying capability. The phase difference caused by the vibration of different cantilever beams may inhibit each other's output capability, thus wasting a large amount of piezoelectric energy. In order to make full use of the energy generated by the vibration of each cantilever beam, the isolated piezoelectric systems are converted from ac to dc after the layout of piezoelectric sheets in multiple beams and then connected in series to form a composite energy-supplying load carrying system. The structure of the subsystem for piezoelectric energy harvesting and conversion corresponding to the piezoelectric sheet on a single cantilever beam and the series composite system (taking three subsystem composites as an example) is shown in Fig. 6. In the composite piezoelectric energy harvesting system, the maximum excitation amplitude corresponding to each subsystem i is X_i. N (N takes the values 1, 2, or 3) subsystems are connected in series to form the final composite energy supply system and connected to a purely resistive dc load system. The final total dc output voltage $V_{\text{oc,total}}$ and P_{total} are obtained as follows:

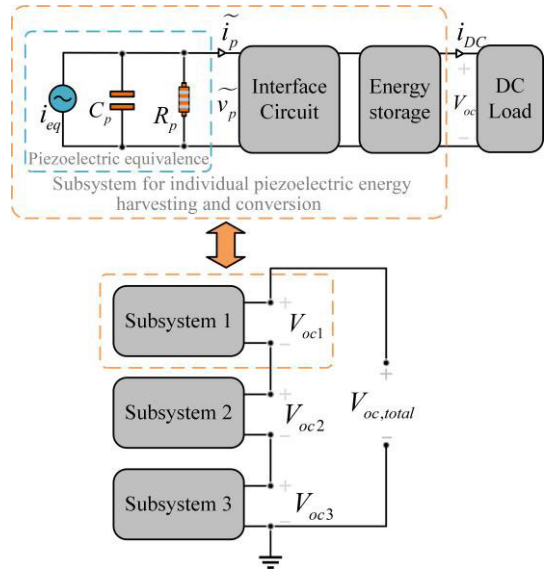

Fig. 6. Structure of a composite energy supply with a piezoelectric energy harvesting system (composite of three subsystems as an example).

$$V_{\text{oc,total}} = \sum_{i=1}^{N} V_{oci} = \frac{\Theta \omega R_p}{\sqrt{1 + \omega^2 R_p^2 \left(C_p + 2C_{\text{ed}}\right)^2}} \sin\left(\omega t + \tan^{-1}\left[\frac{1}{\omega R_p \left(C_p + 2C_{\text{ed}}\right)}\right]\right) \sum_{i=1}^{N} X_i \tag{29}$$

$$P_{\text{total}} = \frac{V_{\text{oc,total}}^2}{R_L} = \frac{\Theta^2 \omega^2 R_p^2}{R_L\left[1 + \omega^2 R_p^2 \left(C_p + 2C_{\text{ed}}\right)^2\right]} \sin^2\left(\omega t + \tan^{-1}\left[\frac{1}{\omega R_p \left(C_p + 2C_{\text{ed}}\right)}\right]\right)\left(\sum_{i=1}^{N} X_i\right)^2. \tag{30}$$

IV. Measurements and Discussions

A. Measurement Platform

The measurement platform of SAPEH-DFB is shown in Fig. 7. It consists of six main components: a shaker, PEH, a signal generator, a power amplifier, an oscilloscope, and a millivolt meter. The measurement process is as follows: The sinusoidal signal generated by the signal generator (KEYSIGHT 336MEM2U) is amplified by a power amplifier (AIGTEK ATA-3040B) to drive the shaker (SHIAO JZ-020). An oscilloscope (KEYSIGHT DSOX2004A)

Authorized licensed use limited to: Institut Teknologi Sepuluh Nopember. Downloaded on March 14,2026 at 15:22:35 UTC from IEEE Xplore. Restrictions apply.

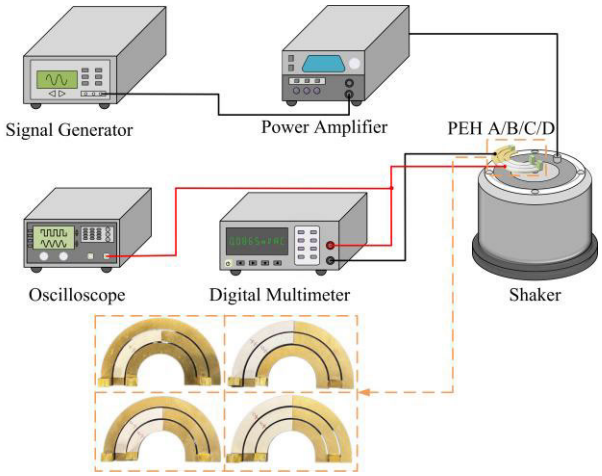

Fig. 7. Connection relationship of the measurement platform.

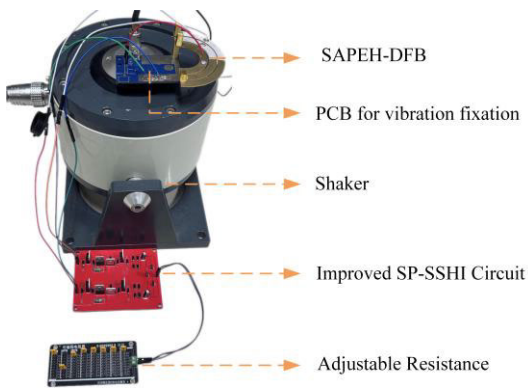

Fig. 8. Photograph of the measurement.

is used to capture the output voltage waveform, and a millivoltmeter (KEYSIGHT 34450A) is used to measure the rms value of the output voltage. The shaker drives the PEH to vibrate, which causes the PEH to deform and generate voltage. The vibration acceleration of the shaker is monitored and adjusted in real time by the software YMC9800, which ensures that the acceleration is constant at 0.1 g during the test.

In order to measure the output capacity and stability of the piezoelectric energy harvesting system under different piezoelectric layer configurations, and to determine the optimal configuration for this 3-DOF system. Four piezoelectric structures are machined and fabricated in this work. The cantilever beams were cut from 1-mm-thick copper plates, and the piezoelectric materials were bonded to the cantilever beams with conductive adhesive. The fixed end of the PEH is soldered to the PCB, and the PCB is fixed to the shaker with a nut. Since the stiffness of the PCB is much greater than that of the PEH, the effect of the PCB on the energy harvester is negligible. A photograph of the measurement is shown in Fig. 8.

B. Frequency Response Measurement

The SAPEH-DFB with four different piezoelectric layer configurations is fixed on the shaker, and an excitation with an acceleration of 0.1 g in the vertical direction is applied. The frequency responses of different PEHs are shown in Fig. 9.

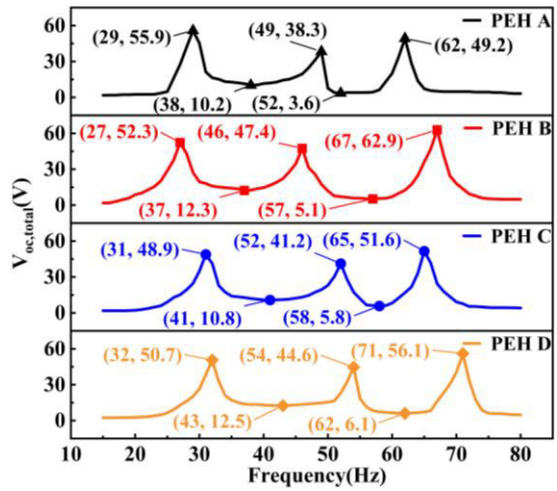

Fig. 9. Frequency response of different PEHs.

The peak output voltages at the three resonance frequency points of PEH A with no subsystems connected in series are 55.9, 38.3, and 49.2 V, respectively, with a bandwidth of 35 Hz. The output voltages at the three resonance frequency points of PEH B with multiple subsystems connected in series are 52.3, 47.4, and 62.9 V, respectively, PEH C's are 48.9, 41.2, and 51.6 V, respectively, and PEH D's are 50.9, 41.2, and 51.6 V, respectively. The SAPEH-DFB has three resonance frequencies close to each other in the range of 20–80 Hz, and the output voltages between the resonance peaks are broadened by the coupling effect in the vibration process of the triple-beam, which greatly broadens the operating frequency band. Three closely spaced vibration modes are realized in the operating frequency band, which effectively broadens the bandwidth. In addition, the bandwidths of PEH B and PEH C with two subsystems in series are 58 and 51 Hz, respectively, and the bandwidth of PEH D with three subsystems in series is 60 Hz. The bandwidths of PEH B, PEH C, and PEH D have been improved by 65.7%, 45.7%, and 71.4%, respectively, compared with that of the isolated piezoelectric system PEH A. It can be seen that the subsystem in the series method again effectively broadens the bandwidth with the superior physical structure itself. However, the bandwidth expansion effect of this method weakens as more subsystems with similar structures are connected in series. For PEH D with three subsystems in series, its bandwidth is only 2 Hz wider than that of PEH B with two subsystems in series.

Fig. 10 shows the theoretical and measured frequency response results of SAPEH-DFB. In terms of frequency response, the measured results show good agreement with the theoretical results, with excellent compliance between the theoretical and measured results. The effective boundary has been labeled, defining the frequency points where the open-circuit voltage is higher than the effective boundary.

C. Output Power Measurement

The adjustable resistor values are varied to investigate the output power of the SAPEH-DFB in different operating modes, as shown in Fig. 11. Three operating frequency points

Authorized licensed use limited to: Institut Teknologi Sepuluh Nopember. Downloaded on March 14,2026 at 15:22:35 UTC from IEEE Xplore. Restrictions apply.

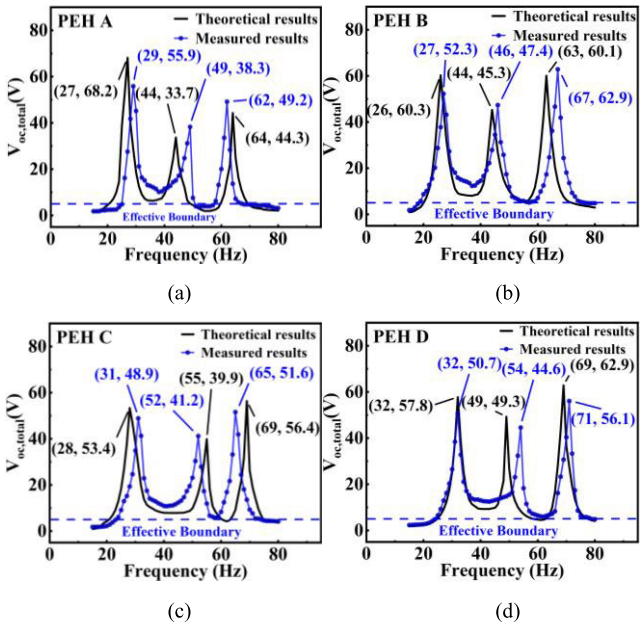

Fig. 10. Comparison of frequency response between theoretical and measured results. (a) PEH A. (b) PEH B. (c) PEH C. (d) PEH D.

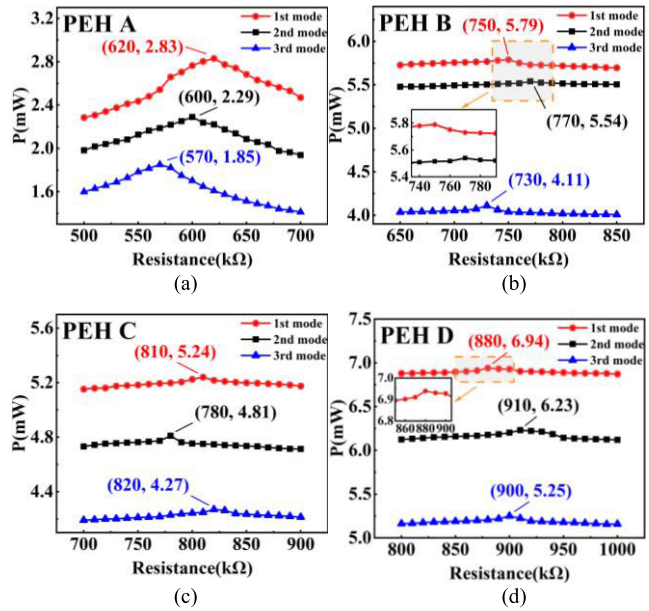

Fig. 11. Relationship between output power and load resistance at resonant frequency. (a) PEH A. (b) PEH B. (c) PEH C. (d) PEH D.

correspond to three operating modes. When the output power reaches the maximum value, the optimal load resistance can be determined. The optimal load resistance of the PEH A with the stand-alone piezoelectric layer system in the first operating mode is 620 kΩ with an output power of 2.83 Mw. It is 600 kΩ with an output power of 2.29 mW in the second operating mode. It is 570 kΩ with an output power of 1.85 mW in the 3rd operating mode. With the increase of the operating frequency, the PEH A with the stand-alone piezoelectric layer system shows a gradual decrease in output performance, but still has relatively good output performance at the three operating frequencies. The optimal load resistances of PEH B with two piezoelectric layer subsystems connected in series are 750, 770, and 730 kΩ in order in the three operating modes, corresponding to 5.79, 5.54, and 4.11 mW, respectively. The optimal load resistances of PEH C are 810, 780, and 820 kΩ in order in the three operating modes, corresponding to 5.24, 4.81, and 4.27 mW, respectively. The output power corresponding to the optimal load in the three operating modes of PEH B is increased by 104.6%, 141.9%, and 122.2%, respectively, compared with that of PEH; PEH C's is increased by 85.2%, 110.0%, and 130.8%, respectively, compared with that of PEH A. The circuit connection of the two piezoelectric layer subsystems in series allows the composite system to have a high output power in either the first, second, or third mode of operation. In addition, the piezoelectric energy harvesting system with piezoelectric layer subsystems connected in series is less sensitive to changes in the resistance of the external load, i.e., the electrical output performance of the system is more stable. Compared with PEH C, PEH B has higher output power and its output performance is clearly superior to that of PEH C. For two piezoelectric layer subsystems connected in series, the piezoelectric layer configuration of the PEH B structure is a more ideal way to set up the piezoelectric layer.

The optimal load resistances of the three piezoelectric layer subsystems connected in series with the PEH D in the three operating modes are 880, 910, and 900 kΩ in order, corresponding to an output power of 6.94, 6.23, and 5.25 mW, respectively. The PEH D consistently exhibits the highest output power in all three operating modes. The output power corresponding to the optimal load in the three operating modes of PEH D is improved by 145.2%, 172.1%, and 198.3%, respectively, compared to PEH A. Its permeance is further improved by 19.9%, 12.5%, and 27.7%, respectively. Compared to the better performing PEH B. The normalized power density (NPD), bandwidth, and other structural indicators of SAPEH-DFB are compared to other PEHs designed based on the linear broadening method, as shown in Table IV.

The NPD (in $\mu\text{W} \cdot \text{g}^{-2} \cdot \text{mm}^{-3}$) measures the energy conversion efficiency of PEH and is calculated as [26]

$$\text{NPD} = \frac{P_{\max}}{a^2 \cdot V_{\text{PEH}}} \tag{31}$$

where $P_{\max}$ is the maximum output power, a is the excitation acceleration, and V_{PEH} is the volume of PEH.

The bandwidths of SAPEH-DFBs with four different piezoelectric layer structures in this work are 35, 58, 51, and 60 Hz, which are extended to 5.8, 9.7, 8.5, and 10 times that of the structure of Li et al [27], respectively. Among the four different piezoelectric layer configurations, the electrical output performance of the three composite systems with subsystems in series far exceeds that of PEH A with a single piezoelectric layer, with wider bandwidth, higher output power, and more concentrated power density. PEH B is the optimal configuration with two subsystems in series; PEH D exists with three subsystems in series, with the best output performance, but requires more piezoelectric layers. Although Li et al. [27] structure has an ultrahigh NPD of 397 $\mu\text{W} \cdot \text{g}^{-2} \cdot \text{mm}^{-3}$ in the first operating mode, the output performance is extremely

Authorized licensed use limited to: Institut Teknologi Sepuluh Nopember. Downloaded on March 14,2026 at 15:22:35 UTC from IEEE Xplore. Restrictions apply.

TABLE IV
COMPARISON OF DIFFERENT PEHs

	Acceleration (g)	Bandwidth (Hz)	P_{max} (μW)			NPD (μW·g^{-2}·mm^{-3})		
			1st	2nd	3rd	1st	2nd	3rd
Erturk [28]	1.0	8	4900	2900	\	18.9	11.2	\
Kim [29]	0.153	4	608	578	\	8.0	7.6	\
Wu [30]	0.1414	7	600	500	\	24.5	22.2	\
Li [27]	0.2	6	1870	23.5	61.5	397.4	5.0	13.1
PEH A	0.1	35	2830	2290	1850	90.3	70.1	59.0
PEH B	0.1	58	5790	5540	4110	164.8	157.7	117.0
PEH C	0.1	51	5240	4810	4270	157.0	144.1	127.9
PEH D	0.1	60	6940	6230	5250	186.7	167.6	141.2

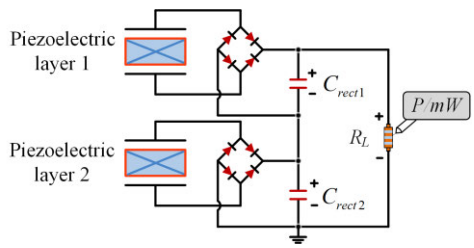

Fig. 12. Full bridge rectified SEH interface circuit for SAPEH-DFB.

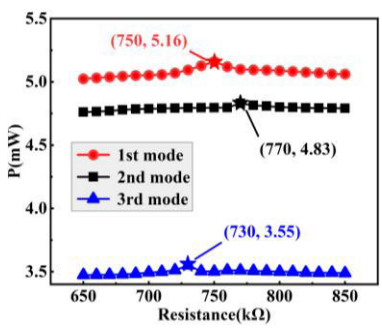

Fig. 13. Relationship between output power and load resistance under the SEH interface circuit.

unstable, dropping sharply to 5.0 and 13.1 μW · g^{-2} · mm^{-3} in the second and third operating modes. The NPDs of PEH B and PEH D in the first operating mode are high enough to power many microelectronic devices. The design of multiple piezoelectric layers in series with the mechanical characteristics of SAPEH-DFB can maximize the use of the excitation of the multibeam vibration, which is a great way to expand the system bandwidth, improve the system output peak value, and improve output stability.

In order to test the output performance enhancement by the modified SP-PSSHI circuit, the PEH B configuration of the SAPEH-DFB is connected to the conventional SEH interface circuit, and the circuit implementation is shown in Fig. 12. The power measurements of the load under three different operating modes of SAPEH-DFB are shown in Fig. 13. The optimal output powers of PEH B at three neighboring resonant frequencies are 5.16, 4.83, and 3.55 mW, respectively.

As shown in Fig. 14, the SP-PSSHI circuit (in Fig. 5) can well improve the output performance of SAPEH-DFB in the three operating modes by about 13.1%, 14.8%, and 15.4%,

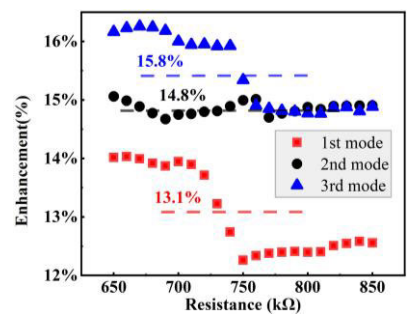

Fig. 14. Improvement of system output power by the modified SP-PSSHI circuit over the conventional SEH interface circuit.

respectively. It is found that the modified SP-PSSHI circuit, as an interface circuit in the piezoelectric energy harvesting system, can indeed improve the electrical output performance of the system.

D. Multidirection Measurement

PEHs are used in a wide range of application scenarios; however, in practice, external excitations usually do not act strictly vertically on PEHs. Therefore, the multidirectional energy harvesting capability is an important indicator of the superiority of a PEH structure. The PEH is placed parallel to the XY plane, and the direction angle γ is defined as the angle between the excitation direction and the positive direction of the Z-axis. The multidirectional energy harvesting capability of the PEH structure is quantified by measuring the output power of the piezoelectric energy harvesting system in each resonant mode under the excitation corresponding to different directional angles γ, with the optimal load connected.

Fig. 15 shows the measured results of the output power of four different PEH structures under each resonance mode when γ is varied from 0° to 90° at 15° intervals, with the optimal load connected. It can be observed that the output voltage of all PEHs reaches its maximum value at $\gamma = 0°$ and decreases gradually as γ increases. When $\gamma = 60°$, the output power of the four PEH structures remains relatively stable. Specify $\gamma = 0°$–$60°$ as the range of suitable operating excitation angles for this system structure. When $\gamma = 75°$, the output power of all four PEH configurations abruptly drops below 1 mV, indicating a sharp decline in output performance, though they still retain a certain load carrying capacity. Because of the coupled influence of the three operating modes,

Authorized licensed use limited to: Institut Teknologi Sepuluh Nopember. Downloaded on March 14,2026 at 15:22:35 UTC from IEEE Xplore. Restrictions apply.

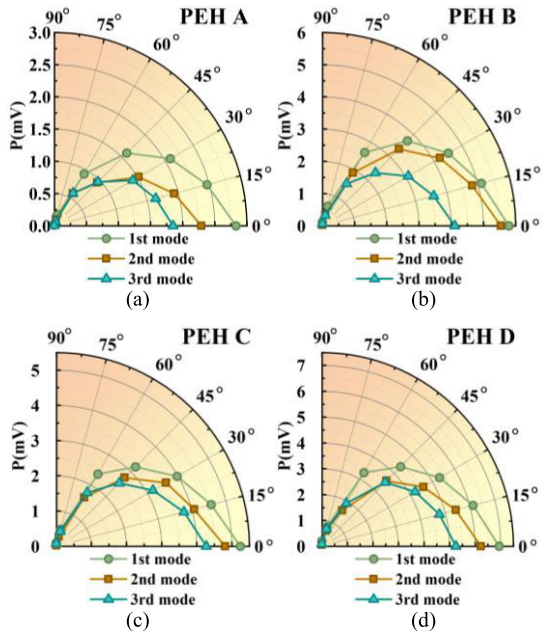

Fig. 15. Relationship between output power and angle at resonant frequency. (a) PEH A. (b) PEH B. (c) PEH C. (d) PEH D.

SAPEH-DFB has a wide range of excitation angle adaptation and can operate properly in the range of $\gamma = 0°–75°$ and presents excellent performance in the range of $\gamma = 0°–60°$. In addition, it can be seen that different piezoelectric layer configuration structures have less effect on the multidirectional energy harvesting capability of the system, which is mainly related to the structure of the cantilever beam itself and the distribution of the mass blocks.

E. Application of Piezoelectric Energy Harvesting System

To demonstrate the feasibility and stability of the SAPEH-DFB in self-powered microelectronic applications, the system was used to drive an ADXL335 sensor. The ADXL335 is a three-axis capacitive accelerometer widely used for measuring static gravitational acceleration in tilt-sensing applications, operating at a nominal voltage of 3.3 V. The analog voltage output of the Z-axis was measured using a digital multimeter while varying the inclination angle (θ) between the sensor and the horizontal plane. The ADXL335 features a zero-g bias output of half the supply voltage and a sensitivity of 300 mV/g. When the sensor is tilted at an angle θ, the acceleration along the Z-axis corresponds to the cosine component of the gravitational acceleration ($g \cdot \cos\theta$). Consequently, the theoretical relationship between the Z-axis analog output voltage (V_A) and the tilt angle (θ) can be expressed as follows:

$$V_A = V_{\text{ref}}/2 + sa_Z = 1.65 + 0.3\cos\theta \tag{32}$$

where $V_{\text{ref}}/2$ represents the zero-g bias voltage, s denotes the sensitivity, and a_Z is the Z-axis acceleration. The measured Z-axis output voltages are compared with theoretical values, as illustrated in Fig. 16. The results exhibit a strong correlation between the measured data and the theoretical predictions

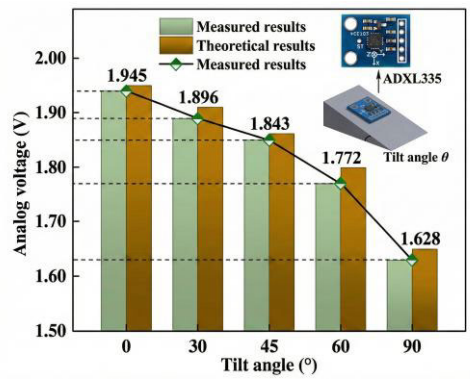

Fig. 16. Relationship between output analog voltage of the Z-axis and tilt angle of the acceleration sensor.

across different tilt angles, confirming that the accelerometer operates correctly, powered by the SAPEH-DFB.

V. Conclusion

In summary, a semicircular arc structure with dual folded beams is designed based on the linear broadening method in this work, and it is made to be connected with a specially designed modified SP-PSSHI circuit for energy conversion. The SAPEH-DFB with triple-beam structure realizes three closely spaced vibration modes in the operating frequency band, effectively broadening the bandwidth. Meanwhile, the coupling effect between the three SAPEH-DFB modes enhances the output performance of each mode and improves the stability of the output. Among the four PEHs, PEH B has better output performance and lower manufacturing cost, which is the primary consideration to meet the power supply demand; PEH D has the highest output performance and higher impedance matching, which is suitable for supplying power to high-resistance devices. The SAPEH-DFB works well in the operating excitation angle range of 0°–75° and shows excellent output performance in the angle range of 0°–60°, which indicates that the structure has a good multidirectional energy harvesting capability. The proven performance in practical applications of the system in this work makes its integration into self-powered microsystems feasible.

References

[1] J. Yang, J. Chen, Y. Liu, W. Yang, Y. Su, and Z. L. Wang, "Triboelectrification-based organic film nanogenerator for acoustic energy harvesting and self-powered active acoustic sensing," *ACS Nano*, vol. 8, no. 3, pp. 2649–2657, Feb. 2014.

[2] J. Chen et al., "Networks of triboelectric nanogenerators for harvesting water wave energy: A potential approach toward blue energy," *ACS Nano*, vol. 9, no. 3, pp. 3324–3331, Feb. 2015.

[3] Q. Xiao and Q. Zhu, "A review on flow energy harvesters based on flapping foils," *J. Fluids Struct.*, vol. 46, pp. 174–191, Apr. 2014.

[4] H. Wu et al., "An ammonite-inspired wrist-worn spiral piezoelectric energy harvester for multidirectional and multifrequency energy scavenging," *IEEE Sensors J.*, vol. 25, no. 9, pp. 14770–14779, May 2025.

[5] I. Sari, T. Balkan, and H. Kulah, "An electromagnetic micro power generator for wideband environmental vibrations," *Sens. Actuators A, Phys.*, vols. 145–146, pp. 405–413, Jul. 2008.

[6] J.-Q. Liu et al., "A MEMS-based piezoelectric power generator array for vibration energy harvesting," *Microelectron. J.*, vol. 39, no. 5, pp. 802–806, May 2008.

Authorized licensed use limited to: Institut Teknologi Sepuluh Nopember. Downloaded on March 14,2026 at 15:22:35 UTC from IEEE Xplore. Restrictions apply.

[7] W. B. Hobbs and D. L. Hu, "Tree-inspired piezoelectric energy harvesting," *J. Fluids Struct.*, vol. 28, pp. 103–114, Jan. 2012.

[8] X. D. Xie, Q. Wang, and N. Wu, "Energy harvesting from transverse ocean waves by a piezoelectric plate," *Int. J. Eng. Sci.*, vol. 81, pp. 41–48, Aug. 2014.

[9] F. Lu, H. P. Lee, and S. P. Lim, "Modeling and analysis of micro piezoelectric power generators for micro-electromechanical-systems applications," *Smart Mater. Struct.*, vol. 13, no. 1, pp. 57–63, Nov. 2003.

[10] S. Fang et al., "High output, lightweight and small-scale rotational piezoelectric energy harvester utilizing internal impact effect," *Energy Convers. Manage.*, vol. 322, Dec. 2024, Art. no. 119180.

[11] X. Huang and T. Zhong, "Hydrokinetic energy harvesting from flow-induced vibration of a hollow cylinder attached with a bi-stable energy harvester," *Energy Convers. Manage.*, vol. 278, Feb. 2023, Art. no. 116718.

[12] Y. Hu, B. Yang, X. Chen, X. Wang, and J. Liu, "Modeling and experimental study of a piezoelectric energy harvester from vortex shedding-induced vibration," *Energy Convers. Manage.*, vol. 162, pp. 145–158, Apr. 2018.

[13] L. Tang, Y. Yang, and C. K. Soh, "Toward broadband vibration-based energy harvesting," *J. Intell. Mater. Syst. Struct.*, vol. 21, no. 18, pp. 1867–1897, Dec. 2010.

[14] X. Zhang, X. Huang, and B. Wang, "A quad-stable nonlinear piezoelectric energy harvester with piecewise stiffness for broadband energy harvesting," *Nonlinear Dyn.*, vol. 112, no. 22, pp. 19633–19652, Jul. 2024.

[15] M. A. Karami and D. J. Inman, "Electromechanical modeling of the low-frequency zigzag micro-energy harvester," *J. Intell. Mater. Syst. Struct.*, vol. 22, no. 3, pp. 271–282, Feb. 2011.

[16] M. M. Magdy, A. M. R. F. El-Bab, and S. F. M. Assal, "Design methodology of a micro-scale 2-DOF energy harvesting device for low frequency and wide bandwidth," *J. Sensor Technol.*, vol. 4, no. 2, pp. 37–47, Jun. 2014.

[17] R. Tikani, L. Torfenezhad, M. Mousavi, and S. Ziaei-Rad, "Optimization of spiral-shaped piezoelectric energy harvester using Taguchi method," *J. Vib. Control*, vol. 24, no. 19, pp. 4484–4491, Aug. 2017.

[18] Y. Xiao, N. Wu, and Q. Wang, "Analysis of a friction-induced vibration piezoelectric energy generator under linear, bi-linear, and impact conditions," *Int. J. Mech. Sci.*, vol. 272, Jun. 2024, Art. no. 109148.

[19] Y. Cao, Y. Liu, K. Zhu, and D. Wang, "A novel high-performance dual semicircular arc piezoelectric energy harvester," *IEEE Sensors J.*, vol. 24, no. 16, pp. 25394–25403, Aug. 2024.

[20] M. Kim, M. Hoegen, J. Dugundji, and B. L. Wardle, "Modeling and experimental verification of proof mass effects on vibration energy harvester performance," *Smart Mater. Struct.*, vol. 19, no. 4, Mar. 2010, Art. no. 045023.

[21] N. E. duToit and B. L. Wardle, "Experimental verification of models for microfabricated piezoelectric vibration energy harvesters," *AIAA J.*, vol. 45, no. 5, pp. 1126–1137, May 2007.

[22] C. Ma, X. Yang, and D. Wang, "A novel semicircular annular piezoelectric energy harvester," *IEEE Sensors J.*, vol. 24, no. 8, pp. 12122–12130, Apr. 2024.

[23] J. Liang and W.-H. Liao, "Improved design and analysis of self-powered synchronized switch interface circuit for piezoelectric energy harvesting systems," *IEEE Trans. Ind. Electron.*, vol. 59, no. 4, pp. 1950–1960, Apr. 2012.

[24] J. Wang, L. Luo, D. Yurchenko, and G. Hu, "Equivalent circuit analysis of a nonlinear vortex-induced vibration piezoelectric energy harvester using synchronized switch technique," *IEEE Trans. Ind. Electron.*, vol. 72, no. 5, pp. 4865–4876, May 2025.

[25] M. Lallart and D. Guyomar, "An optimized self-powered switching circuit for non-linear energy harvesting with low voltage output," *Smart Mater. Struct.*, vol. 17, no. 3, Jun. 2008, Art. no. 035030.

[26] H.-C. Song et al., "Ultra-low resonant piezoelectric MEMS energy harvester with high power density," *J. Microelectromech. Syst.*, vol. 26, no. 6, pp. 1226–1234, Dec. 2017.

[27] X. Li, D. Upadrashta, K. Yu, and Y. Yang, "Analytical modeling and validation of multi-mode piezoelectric energy harvester," *Mech. Syst. Signal Process.*, vol. 124, pp. 613–631, Jun. 2019.

[28] A. Erturk, J. M. Renno, and D. J. Inman, "Modeling of piezoelectric energy harvesting from an L-shaped beam-mass structure with an application to UAVs," *J. Intell. Mater. Syst. Struct.*, vol. 20, no. 5, pp. 529–544, Mar. 2009.

[29] I.-H. Kim, H.-J. Jung, B. M. Lee, and S.-J. Jang, "Broadband energy-harvesting using a two degree-of-freedom vibrating body," *Appl. Phys. Lett.*, vol. 98, no. 21, May 2011, Art. no. 214102.

[30] H. Wu, L. Tang, Y. Yang, and C. K. Soh, "A novel two-degrees-of-freedom piezoelectric energy harvester," *J. Intell. Mater. Syst. Struct.*, vol. 24, no. 3, pp. 357–368, Feb. 2013.

Authorized licensed use limited to: Institut Teknologi Sepuluh Nopember. Downloaded on March 14,2026 at 15:22:35 UTC from IEEE Xplore. Restrictions apply.