RevNo	Revision note:	Date	Signature	Checked
2	Two chips, making four opamps, found unnecessary			

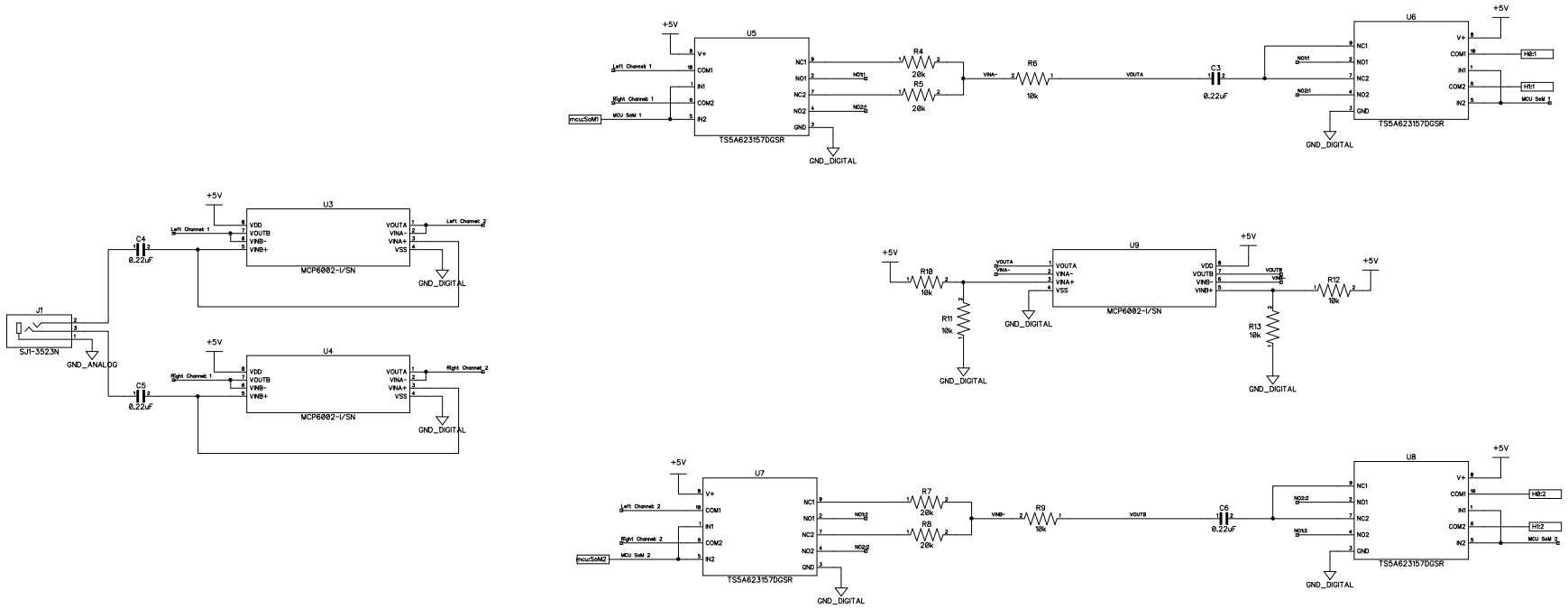

Itemref	Quantity	Title/Name, designation, material, dimension etc			Article No./Reference	
Designed by Z.Allicock		Checked by Z.Allicock	Approved by - date - 2021/09/04	File name	Date 2021/08/20	Scale 1:1
		Stereo or Mono Selector				
					Edition 1	Sheet 1/1