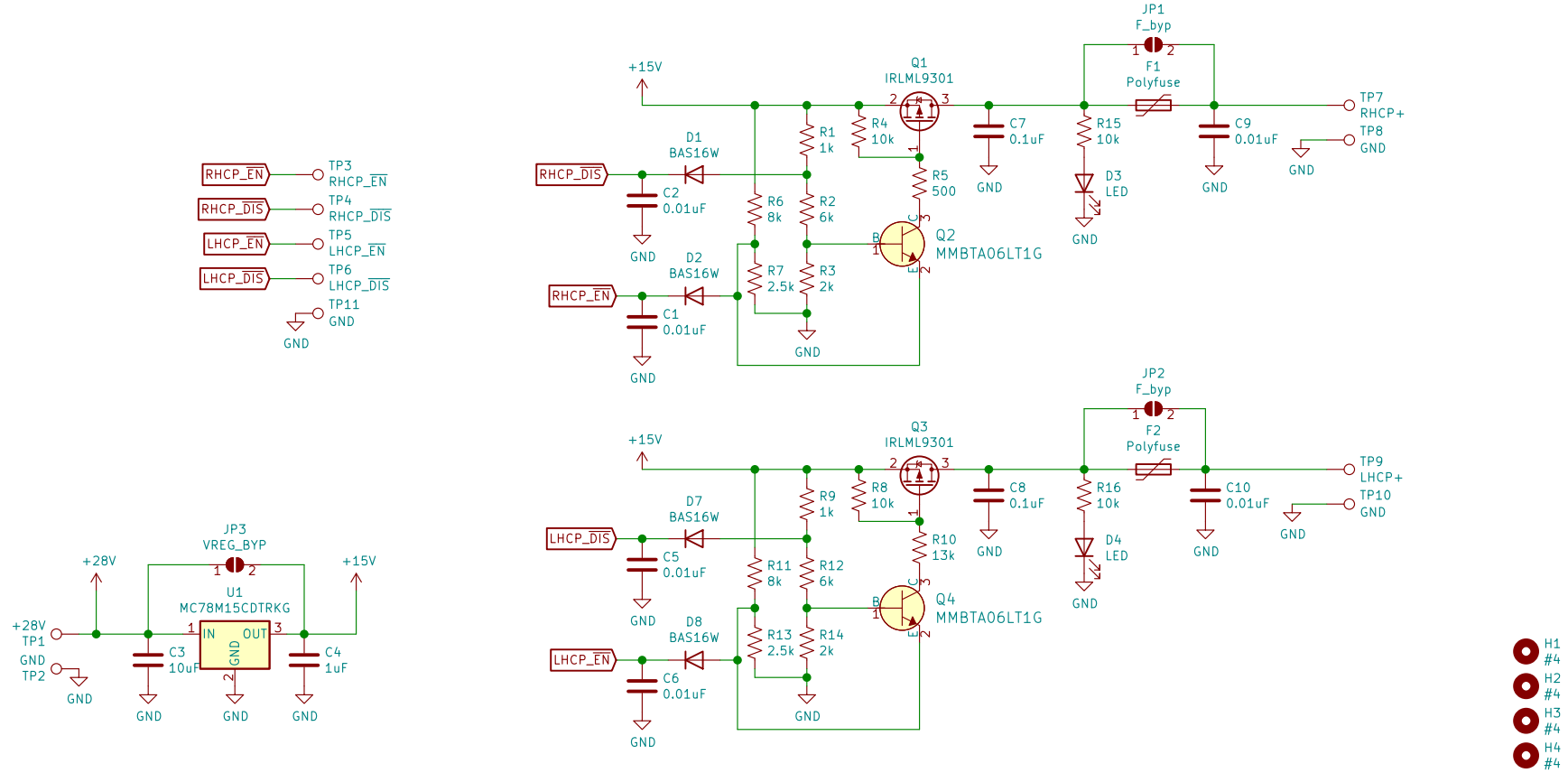

CIRCUIT NOTES:

1. Resistor values in this schematic are for a nominal 13.8V supply voltage.
- Using a 15V Regulator, which should work fine with given resistor values.
2. If changing LNB supply voltage (input to FET Switches):
  - Make sure to adjust resistor values as necessary.
  - Also adjust polyfuse parameters to match (or omit and short JP1 and JP2).
3. Voltage Regulator circuit can be bypassed:
- useful in the event that a supply voltage other than 28V is used.
- can simply omit Vreg components and short SMT jumper JP3.
- V_in Pad (identified in this version as +28V) is fed directly to FET switches
- idea is for other LNBs, like maybe with standard Ku or C Band feeds.
4. For default 15V configuration, Polyfuse is 1206L025YR:
  - 16V, I_hold = 250 mA, I_trip = 500mA.
  - LNB should consume 160mA at +15V.
5. LED circuit for visual power on indicator is optional.

Default LNB NOTES (for VTGS X-Band):
- LNB Manufacturer: Swedish Microwave
- LNB Model Family: PLL LNB Earth Observation
- datasheet: https://smw.se/wp-content/uploads//2021/04/X-Band-LNB-Earth-Observation_rev-04-21-5G.pdf
- Relevant details:
  - Voltage Range: +12V to +24V
  - Current Drain: 190 mA @ +13 V, 160 mA @ +15 V, 140 mA @ +18 V, 110 mA @ +24 V

Author: Zach Leffke, KJ4QLP
License: CC BY 4.0
creativecommons.org/licenses/by/4.0/
VT National Security Institute
Virginia Tech Ground Station (VTGS) SX-Band System

Sheet: /
File: kicad_lnb-power_control.sch

Title: X-Band LNB Power Control, Version 1

Size: USLetter	Date: 2022-01-21	**Rev: -**
KiCad E.D.A. kicad 5.1.12-84ad8e8a8692ubuntu20.04.1		Id: 1/1