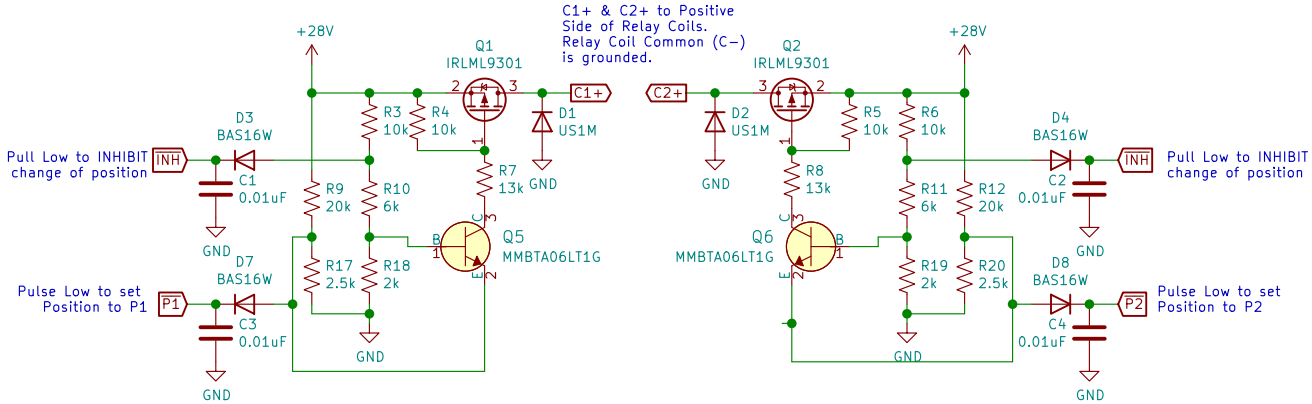

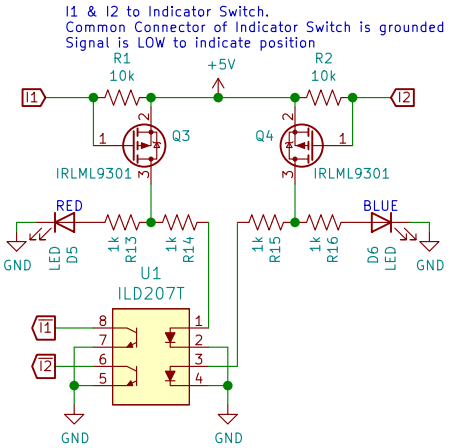

$\overline{P1}$, $\overline{P2}$:
- Ground to Set Position
- Set P1 OR P2 LOW, but not both at same time

$\overline{I1}$, $\overline{I2}$:
- LOW Signal indicates transfer switch position.
- Different LED Colors Indicate Current Position
- See Truth Table

$\overline{INH}$:
- Active LOW Signal INHIBITS both coil control circuits
- Disables ability to change switch position
- Potential use in system level safety lockout

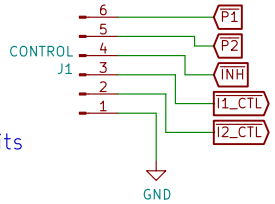

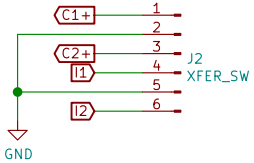

$\overline{I1}$	$\overline{I2}$	XFER POS	LED COLOR
LO	HI	POS1	RED
HI	LO	POS2	BLUE

Indicator Selector:
- Default Position: LOW via optoisolator
- Alternate Position:
  - Cut Solder Jumper Trace
  - Select direct path to Indicator on XFER switch
  - Transfer Switch Indicator Common is grounded so LOW signal still indicates switch position
  - Do not need LEDs, ILD207T, or 5Vreg: Do Not Populate

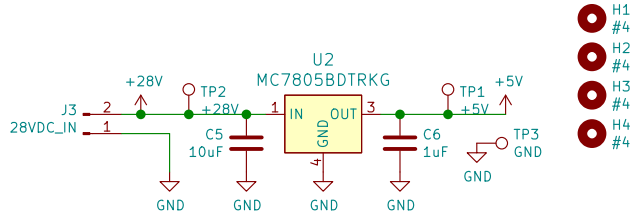

Designed Intended for Relcomm RTS−TS3AB−I RF Transfer Switch
- Controls a single RTS−TS3AB−I RF Transfer Switch
- 28V Coil, Pulse Latching, w/ Indicator Feedback

Design Features:
- Optically Isolated Feedback (ILD207T)
- LED Current Position Indicator
- Relay Coil Control via dual W6PQL based FET Switch circuits

Author: Zach Leffke, KJ4QLP
License: CC BY 4.0
creativecommons.org/licenses/by/4.0/
VT National Security Institute
Virginia Tech Ground Station (VTGS) SX−Band System

Sheet: /
File: xfer−sw_interface.sch

Title: Transfer Switch Interface, Version 2

Size: USLetter	Date: 2022−01−18	Rev: −
KiCad E.D.A. kicad 5.1.12−84ad8e8a8692ubuntu20.04.1		Id: 1/1