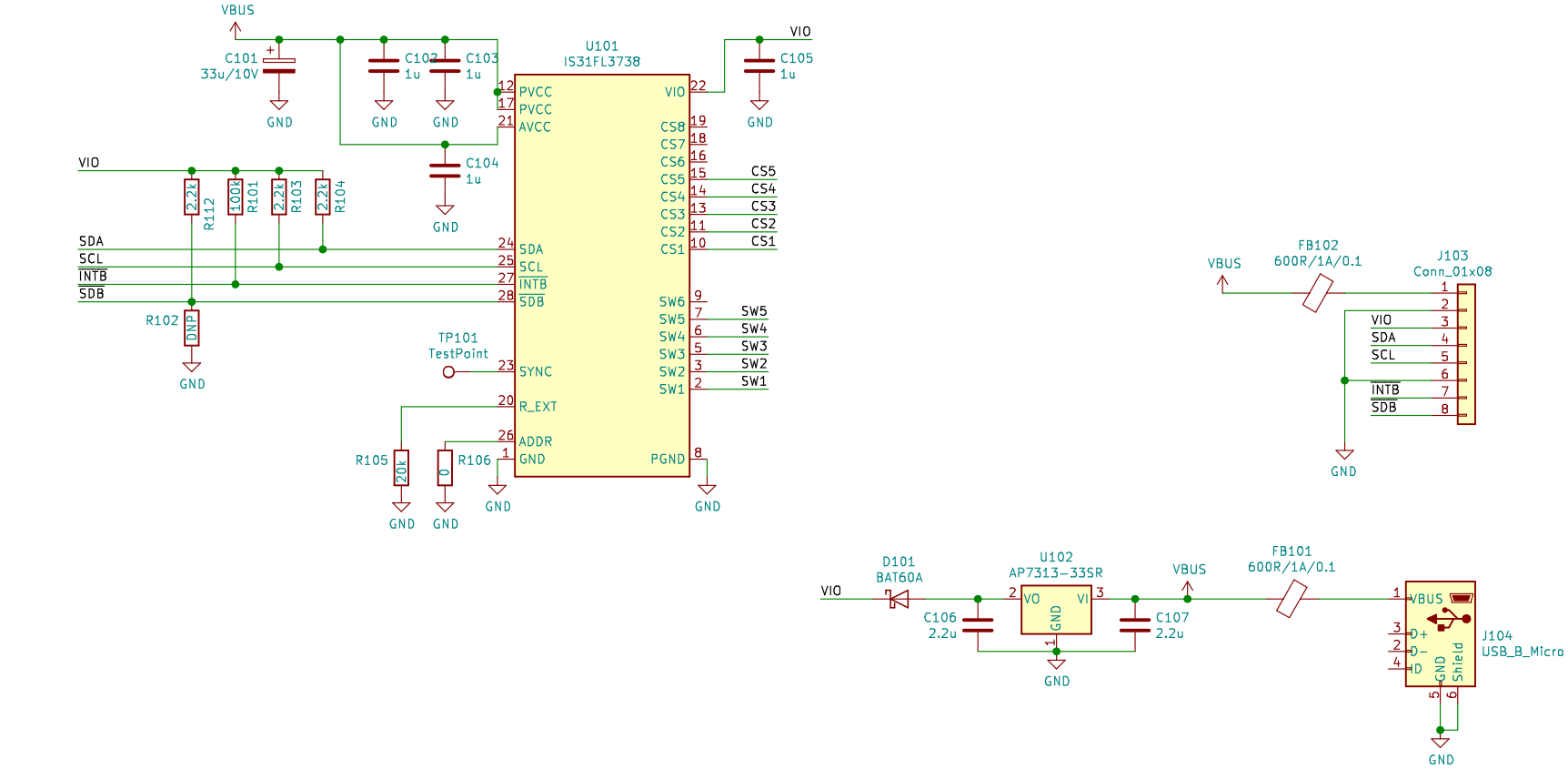

hunz <hunz@mailbox.org>

Sheet: /

File: matrixctl.kicad_sch

Title: Exposure Notifications LED matrix control

Size: A4	Date: 2020-09-23	Rev: 1b
KiCad E.D.A. kicad 5.99.0-unknown-acf13a186104ubuntu20.04.1		Id: 1/1